PHILIPS

Colour TV pattern generator
PM 5515 PM 5516 PM 5518

Service manual

9499 525 01111
Third edition
910201

CUSTOMER SUPPORT

Please note

In correspondence concerning this instrument, please quote the type number and serial number as given on the type plate.

Bitte beachten

Bei Schriftwechsel über dieses Gerät wird gebeten, die Typennummer und die Gerätenummer anzugeben. Diese befinden sich auf dem Typenschild an der Rückseite des Gerätes.

Noter s.v.p.

Dans votre correspondance et dans vos réclamations se rapportant à cet appareil, veuillez toujours indiquer le numéro de type et le numéro de série qui sont marqués sur la plaquette de caractéristiques.

Important

As the instrument is an electrical apparatus, it may be operated only by trained personnel. Maintenance and repairs may also be carried out only by qualified personnel.

Wichtig

Da das Gerät ein elektrisches Betriebsmittel ist, darf die Bedienung nur durch eingewiesenes Personal erfolgen. Wartung und Reparatur dürfen nur von geschultem, fach- und sachkundigem Personal durchgeführt werden.

Important

Comme l'instrument est un équipement électrique, le service doit être assuré par du personnel qualifié. De même, l'entretien et les réparations sont à confier aux personnes suffisamment qualifiées.

© Philips GmbH - Hamburg - Germany - 1991 RA

All rights are strictly reserved.

Reproduction or divulgation in any form whasoever is not permitted without written authority from the copyright owner.

Issued by Philips GmbH - Unternehmensbereich Elektronik für Wissenschaft und Industrie- Werk für Meßtechnik

Printed in Germany

CONTENTS

1.	**SAFETY INSTRUCTIONS**	
1.1.	Safety precautions	1-1
1.2.	Caution and warning statements	1-1
1.3.	Symbols	1-1
1.4.	Impaired safety-protection	1-1
1.5.	General clauses	1-1
1.6.	Isolation transformer	1-2
2.	**ADAPTATION TO THE LOCAL VOLTAGE**	2-1
3.	**OPERATING PRINCIPLE**	3-1
	Description of the block diagram	
4.	**CIRCUIT DESCRIPTION**	4-1
4.1.	General	4-1
4.2.	Motherboard, main unit 11	4-1
4.3.	Pattern generation, digital unit 1	4-9
4.4.	PAL/NTSC unit 2	4-14
4.5.	SECAM unit 3	4-16
4.6.	Y/C & RGB unit 5A	4-17
4.7.	Multiburst/Circle unit 6	4-18
4.8.	Sound units	4-20
4.9.	RF dual/stereo sound unit 8	4-22
4.10.	Mono sound unit 9	4-24
4.11.	RF unit 10	4-26
4.12.	Keyboard and display unit 12	4-28
5.	**ACCESS TO PARTS**	5-1
5.1.	Top and bottom covers	5-1
5.2.	Fuse, mains transformer	5-1
5.3.	Carrying handle	5-1
5.4.	Knobs	5-1
5.5.	Pushbuttons	5-1
5.6.	Units 1 to 9	5-1
5.7.	Textplate, front-panel edging	5-1
6.	**PERFORMANCE CHECK**	
6.1.	General information	6-1
6.2.	General functional test	6-1
7.	**SELF–TEST PROGRAM, DIAGNOSTIC PROGRAM**	
7.1.	Self-test program, error messages	7-1
7.2.	Diagnostic program	7-1
8.	**CHECKING AND ADJUSTING**	
8.1.	General information	8-1
8.2.	Recommended test equipment	8-1
8.3.	Sound modulation (FM)	8-2
8.4.	Table of checks and adjustments	8-3

9.	**SAFETY INSPECTION AND TESTS AFTER REPAIR AND MAINTENANCE IN THE PRIMARY CIRCUIT**	
9.1.	General directives	9-1
9.2.	Safety components	9-1
9.3.	Checking the protective earth connection	9-1
9.4.	Checking the insulation resistance	9-1
10.	**SPARE PARTS**	
10.1.	General	10-1
10.2.	Static sensitive components	10-1
10.3.	Handling MOS devices	10-1
10.4.	Soldering techniques	10-1
10.5.	Parts list	10-3
11.	**FIGURES 1-128**	
	Fig. 1-56 Test patterns, test signals, vector displays, details of composite video signal (related to chapter 8.4. table of checks and adjustments)	
	Fig. 57 Notch filter 3 MHz	
	Fig. 58 Service kit	
	Fig. 70 Spare parts, mechanical parts	
	Fig. 100 – 128 Block diagrams, circuit diagrams, component lay-outs Detailed contents see septum FIGURES	
12.	**APPENDIX**	
	TV systems used in various countries	12-1
	Level conversion table μV/dBμV (75 Ω)	12-3
	Data sheets of integrated circuits: SAA3007, SAA1043, SAA1044, SAB3036, TDA2501, TDA2506, TDA2507	12-5
13.	**ADDRESSES FOR SALES AND SERVICE**	

1. SAFETY INSTRUCTIONS

> WARNING:
> These servicing instructions are for use by qualified personnel only. To reduce the risk of electric shock, do not perform any servicing other then that specified in the Operating Instructions unless you are fully qualified to do so.

Read these pages carefully before installation and use of the instrument.

The following clauses contain information, cautions and warnings which must be followed to ensure safe operation and to retain the instrument in a safe condition.
Adjustment, maintenance and repair of the instrument shall be carried out only by qualified personnel.

1.1. SAFETY PRECAUTIONS

For the correct and safe use of this instrument it is essential that both operating and servicing personnel follow generally-accepted safety procedures in addition to the safety precautions specified in this manual. Specific warning and caution statements, where they apply, will be found throughout the manual. Where necessary, the warning and caution statements and/or symbols are marked on the apparatus.

1.2. CAUTION AND WARNING STATEMENTS

CAUTION:
Is used to indicate correct operating or maintenance procedures in order to prevent damage to or destruction of the equipment or other property.

> WARNING:
> Calls attention to a potential danger that requires correct procedures or practices in order to prevent personal injury.

1.3. SYMBOLS

Protective earth (grounding) terminal (black)

1.4. IMPAIRED SAFETY–PROTECTION

Whenever it is likely that safety-protection has been impaired, the instrument must be made inoperative and be secured against any unintended operation. The matter should then be referred to qualified technicians.
Safety protection is likely to be impaired if, for example, the instrument fails to perform the intended measurements or shows visible damage.

1.5. GENERAL CLAUSES

1.5.1. > WARNING:
> The opening of covers or removal of parts, except those to which access can be gained by hand, is likely to expose live parts and accessible terminals which can be dangerous to live.

1.5.2. The instrument shall be disconnected from all voltage sources before it is opened.

1.5.3. Bear in mind that capacitors inside the instrument can hold their charge even if the instrument has been separated from all voltage sources.

1.5.4. > WARNING:
> Any interruption of the protective earth conductor inside or outside the instrument, or disconnection of the protective earth terminal, is likely to make the instrument dangerous.
> Intentional interruption is prohibited.

1.5.5. Components which are important for the safety of the instrument may only be renewed by components obtained through your local Philips organisation (see also chapter 9).

1.5.6. After repair and maintenance in the primary circuit, safety inspection and tests, as mentioned in chapter 9, have to be performed.

1.6. ISOLATION TRANSFORMER

As most MTV and CTV receivers are constructed with the chassis potentially "live", it is a sensible precaution to power the receiver under test via a suitable isolating transformer.
This permits direct connection of the television chassis to the earth terminals of any test instrument thus providing a common signal path and reducing the risk of electric shock.

2.6. ADAPTATION TO THE LOCAL VOLTAGE

WARNING:	The opening of covers or removal of parts, except those to which access can be gained by hand is likely to expose live parts, and accessible terminals may also be live. The instrument shall be disconnected from all voltage sources before any replacement or maintenance and repair during which the instrument will be opened. If afterwards any adjustment, maintenance or repair of the opened instrument under voltage condition is inevitable, it shall be carried out only by a skilled person who is aware of the hazard involved. Bear in mind that capacitors inside the instrument may still be charged even if the instrument is separated from all voltage sources.

For adaptation to local mains voltage the wiring of the transformer must be altered; the mains fuse should be replaced dependent on the mains voltage.

Proceed as follows:

- Unplug the mains connector
- Loosen 2 cross-slotted screws at the rear side of the instrument
- Remove the top cover
- Remove the isolating cover of the topside of the mains transformer, remove cable binder before
- Alter the wiring/connections of the mains transformer according to the connection diagram
- Refit the isolation cover
- If necessary, insert the advised fuse (315 mAT or 630 mAT) into the fuse holder instead of the fuse built-in. In this case change current label at the rear of the instrument.
  The fuse is located in a holder on the rear panel, adjacent to the mains socket. Open the lift-out lug with a screwdriver, see below.
- Change the mains voltage label at the rear of the instrument in accordance with the mains voltage selected.
  The labels for the mains voltage and current like the fuse are inserted into a plastic cover.
- Close the instrument.

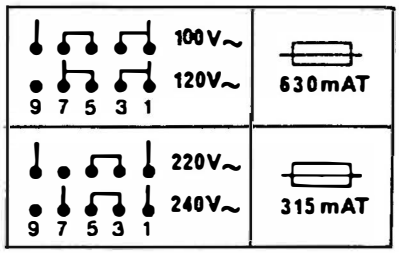

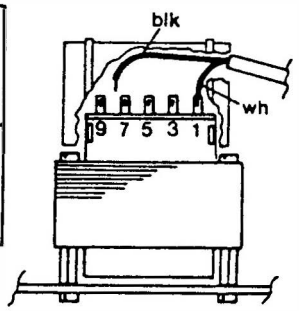

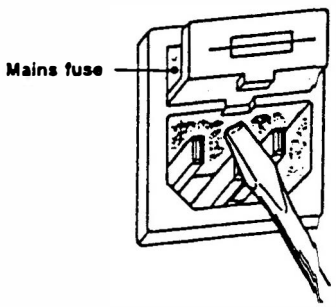

Este manual é comumente encontrado na internet, mas com uma qualidade pessima, scan torto, cheio de marcas de perfuracao/encadernacao. Como eu gosto dos meus manuais bem feitos, e eu ganhei um gerador de padroes desse hoje, eu restaurei o manual e disponibilizo GRATUITAMENTE a todos.
http://www.tablabs.com.br/scans
http://tabajara-labs.blogspot.com

3. OPERATING PRINCIPLE; Block diagram Fig. 100

Five supply voltages are generated by the power supply of the motherboard (unit 11).
Three stabilized voltages, + 5 V and ± 12 V, are realized by four-terminal voltage regulators.
A supply voltage of + 6 V, generated from the + 12 V supply, is used for some CMOS components.
A slightly stabilized voltage of + 30 V is used for the tuning voltage amplifier of the CITAC.

The Central Processing Unit CPU on the motherboard consists of a microprocessor 8085 with RAM and PROM memory, a combined RAM/port circuit P8155 for input and output operations and the CITAC for adjustment and control of the VCOs in the RF unit U10.

The 8085 microprocessor reads the program instructions from PROM 313. Address latch 312 serves for generating the address information A0 – A7. Communication with the subunits is achieved via the serial IIC bus (RAM, CITAC) and via the C-bus.

The RAM/port IC314 contains the working memory for the microprocessor and all inputs and outputs for controlling the subunits. Input port A of IC314 enters the status signals from the stereo and teletext unit and the binary codes from the PAL/NTSC- and SECAM system switches.

Information from the keyboard unit is transferred in serial form to the restart input of the processor. Display data are sent from the processor to the display/LEDs via data line SDA, clock line SCL and the strobe lines LEDEN and DISEN.

The circuit 315 is a battery buffered RAM for saving complete parameter set ups.

A solder switch at the processor must be closed for activating the service test program.

The master oscillator on the main unit 11 generates the reference frequencies for PAL/SECAM or NTSC, which clock the sync pulse generator. This IC generates the horizontal and vertical H and V pulses and their sub-divided pulses which control all circuitries in the instrument. It also organizes the subcarrier lock in combination with the subcarrier coupler on the PAL/NTSC unit.

On the digital unit 1 the horizontal elements for all the black/white patterns ('digital patterns') are generated in the line pulse generator and the subsequent gate circuitry, while the field pulse generator takes care of all the vertical elements. In the pattern PROM all information for the colour patterns i.e. saturation steps, vector informations, are stored. The pattern control register controlled by the data, clock and strobe lines selects the actual pattern out of this PROM. At the output of the digital unit the luminance data are available and fed to the video output path; the chroma data are further processed in the PAL/NTSC and SECAM unit.
Furthermore control signals for the multiburst and circle generation are fed to unit 6.
A special part is the moving pattern generator for the black bar moving in the lower part of the VCR pattern.
For instruments with Video-Program-System (VPS) additional signals are generated by a different digital unit 1 – VPS (multilayer pcb).

On the PAL/NTSC unit 2 a VCO generates the colour subcarrier frequencies for the 4 different TV systems. The selected frequency is locked in a phase loop with the subcarrier coupler which is controlled by the sync pulse generator and the TV system control on the main unit 11. So the correct relationship between subcarrier and line frequency is achieved.

On the second part of this unit 2 the complete chroma data from the digital unit, consisting of the colour components, the saturation step signals and the vector information together with the PAL or NTSC burst are applied to the U- and V-matrix. The colour difference signals are composed in two summing points and fed via low-pass filters to the PAL/NTSC encoder. This IC encodes the colour difference signal R−Y and B−Y onto one subcarrier. Quadrature modulation allows the coding to be in accordance with either the PAL or NTSC system.

The **SECAM** unit 3 consists of the modulator controller and the encoder (modulator) as well as circuitries for signal shaping according to the SECAM system.

The colour bar and greyscale signals are weighted, summed and fed to the encoder which produces sequential, frequency modulated colour signals. Further circuitries are the band limitation, the low-frequency pre-emphasis and the high frequency 'anti-bell filter'.

The modulator controller generates two subcarrier frequencies necessary for the modulation and feeds a control voltage for the encoder.

All video signals, i.e. luminance, chroma, multiburst, teletext/antiope, are fed through the **CVBS summing amplifier** on unit 11 to the VIDEO OUT socket; furthermore the signals are fed via an amplifier, where the right video polarity is selected and the residual carrier can be adjusted, via the RF modulator to the RF OUT socket.

Dependent on instrument and selected TV system teletext signals on unit 4 are available. PM 5515−T generates 5 teletext pages and a test pattern (wall paper). PM 5518−T generates 5 teletext pages for system PAL and 7 pages for SECAM L (Antiope). Teletext data are sent in lines 22 and 335. The text contents depends on software.

The teletext clock is generated in a phase-locked-loop, 6.93 MHz for teletext and 6.20 MHz for SECAM. The sub-divided frequency reads parallel teletext data from the teletext PROM which are serialized and formed by a filter path. For teletext the contents of a data line comprises 360 bits as 45 bytes of 8 bits each. The complete teletext signal is applied from unit 4 to the video summing amplifier on the main unit.

For the **Y/C & RGB unit 5A** the complete luminance data are applied from the digital unit 1. The luminance data are weighted in three summing points for RED, GREEN and BLUE.
The single colour components are applied via $\sin^2$ filters to the differential amplifier output stages.
The multiburst pattern signals are directly applied to the output stages.
The sync signal and the PAL/NTSC subcarrier complete the five output signals at the BNC sockets at the rear of the instrument for control of colour monitors and graphic terminals. For SECAM the subcarrier output ist not used.
The luminance and chroma signals are available at the Y/C output 4 pin S-connector.

The **multiburst generator** on unit **6** comprises a counter, a summing amplifier current sources for the subsequent triangle generator, a sine shaper and a start/stop circuit.
On each TV line the circuit delivers 8 packages of sine waves.
A counter with subsequent summing amplifier deliver a staircase signal which in a triangle generator is converted into packages of sinewaves with stepwise increases frequencies from 0.8 to 4.8 MHz.

The **circle generation** on **unit 6** is achieved by two pulses, which at the intersection of the line and the circle are two times actuated by the comparator during the active line time.

Sound units

Depending on the type of instrument different sound units are built in. The dual/stereo sound versions PM 5515 / PM 5518 indicated by an 'X' in the type number are equipped with two sound units: LF stereo sound (U7) and RF stereo sound (U8). All other instruments and PM 5516 are equipped with the Mono sound unit 9 instead.

The mono sound unit 9 comprises a shift register with sound logic for different TV systems, the sound oscillator (1 kHz), input circuitry for external sound signals, programmable sound carrier oscillator and the AM/FM modulator.
Unit 9 is controlled from the CPU via C-bus lines DATA, CLOCK and STROBE. Dependent on the chosen TV system the sound carrier frequency, level and modulation deviation is selected.

RF dual/stereo sound unit (U8):
Unit 8 in general comprises two mono sound units 9 and generates the sound carrier frequencies 4.5/5.5/6 and 6.5 MHz according to the different TV system. Some parts are built into the LF dual/stereo unit 7.
Unit 8 is controlled from the CPU via C-bus lines DATA, CLOCK and STROBE. Dependent on the chosen TV system the frequencies for sound carrier 1, modulation and carrier levels are selected.
The sound carrier 2 frequency 5.742 MHz is generated if the instrument is switched to the modes DUAL or STEREO.
Sound carrier 1 and sound carrier 2 are summed up and applied to the RF unit 10.

LF dual/stereo sound unit (U7):
Depending on the selected sound mode unit 7 generates the audio frequencies 1 kHz and 3 kHz as well as the pilot carrier 54.68 kHz and the two identification frequencies 274.1 Hz/117.5 Hz in the DUAL/STEREO mode. The line frequency serves as reference. The mode dual and stereo are only possible in the TV system PAL G. The different sound modes are controlled from the CPU via C-bus lines DATA, CLOCK and STROBE by the shift register.

The **RF unit 10** serves for generating a double-sideband modulated TV signal in the frequency range 32 MHz to 900 MHz. The unit consists of six oscillators, two amplifiers, modulator part, divider and low-pass filter. All circuits are built into different screened sections in the RF box.
The oscillators VC01A to F for the RF frequency are switched on and tuned by the CITAC (Computer Interface for Tuning and Control) via lines F1 to F6 resp. AFC from the motherboard. Signals F1 to F6 are additionally used for switching the corresponding path of the low-pass filter.

The RF carrier is fed into a mixer which is used as AM modulator. The video and sound signals are added at its modulating input. From the output of the mixer the double-sideband modulated RF carrier is fed to the low-pass filter path and the RF attenuator to the RF output.

Additionally the RF carrier signal is used for the frequency control loop. After division by 256 the signal is fed via DIV OUT to the CITAC. The CITAC compares this frequency with an internally generated reference (4 MHz) to supply the tuning voltage AFC for the VCOs in order to lock the RF carrierfrequency to the set value.

The **Keyboard and display unit 12** contains a 4-digit LED display, 21 to 29 pushbutton keys withthe assigned LEDs next the keys (depending on version) and its decoder/driver circuits.
Data transfer from the CPU is performed via the C-bus lines SCL, SDA and the control lines 'display enable' and 'LED enable'.
Input data sensed from the keyboard matrix are sent as serial information from the control transmiter via line KEYDAT to the CPU.

4. CIRCUIT DESCRIPTION

4.1. GENERAL

Chapter 4 is intended to be used for understanding the functions of the electronic circuitries in conjunction with the circuit diagrams in order to perform effective fault finding and repair.
For the best survey about the units see

- Fig. 100, Block diagram
  (description of the block diagram: chapter 3)
- Fig. 103, Overall circuit diagram, survey of units and versions
- Fig. 105, Motherboard circuit diagram.

Access to parts (details see chapter 5)

The single plug-in units U1 to U9 are mechanically fixed at both sides and secured against unwanted lift-out. Additionally all units are fixed by a transverse ridge. For service purpose the units can be lifted by an extraction-tool. All components and adjustment items are accessible by means of the extension test board (see chapter 8.2.). So the instrument is in full operation best suitable for fault finding.

Fig. 28 – 30 are not meant for check and adjustment purposes, but are values and signal shapes according to the TV system and so are fulfilled by the instrument.

Some main signals controlling all subunits are the
Vertical field pulse (V, fV) and the
Horizontal line pulse (H, fH).
Denominations of multiples or sub-divided frequencies are not always uniform due to the data sheets of the suppliers of components, e. g.
fH80 ≙ 80 x line frequency = 1.25 MHz
fH2 = fH/2 ≙ line time: 2 = 32 µs

4.2. Motherboard, main unit 11

The motherboard comprises several functional units or parts of them and serves for interconnections between the different plug-in units. Overview figures 104 to 107:

Fig. 104: component lay-out including connectors and test points TP1 to TP12.

Fig. 105: circuit diagram of the master oscillator, universal sync generator, TV system control, luminance summing point, connections to plug-in units U1 to U9 and outputs for audio and trigger signals.

Fig. 106: Central Processing Unit (CPU), CITAC (RF tuning control), TV system switches and power supply.

Fig. 107: pre-amplifier for external video input, video summing points and analog video path of the composite video signal to external video outputs and to RF-modulator unit 10.

4.2.1. Power supply (part U11)

Five supply voltages are generated by the supply section of the motherboard (unit 11).
Three stabilized voltages, + 5 V and ± 12 V are realized by four-terminal voltage regulators 304, 301 and 302. These three voltages are used in all plug-in units 2 to 9; + 5 V is applied to pins 46 of the multiple-pin plugs, + 12 V to pins 45 and – 12 V to pins 44.
An additional supply voltage of + 6 V is generated from the + 12 V supply and is used for the CMOS components: the universal sync generator SAA 1043 (unit 11) and the subcarrier coupler SAA 1044 (unit 2).
A slightly stabilized voltage of + 30 V is used for the tuning voltage amplifier of the CITAC (IC318 unit 11) which generates the AFC voltage for the RF unit.
The mains transformer (pos. 751) was altered to mains voltage settings 100 V, 120 V, 220 V or 240 V from production autumn 1986 onwards. For details see page 2 – 1 and Fig. 103.

4.2.2. Central Processing Unit (CPU)

The CPU consists of a microprocessor 8085 with RAM- and PROM memory, a combined RAM/port circuit P8155 for input- and output operations and the CITAC for adjustment and control of the VCOs in the RF unit U10.

The 8085 microprocessor (IC311) reads the program instructions from PROM 313. Address latch 312 serves for generating the address information AØ – A7 for the PROM from the multiplexed address- and data bus ADØ – AD7; the control of this latch is performed with the signal ALE from the processor. Data informations from the PROM are fed directly to the bus ADØ – AD7, controlled with A14 and $\overline{RD}$.

The solder switch ST1 at the input SID of the processor must be closed when the test program shall be started; for the normal operating program ST1 must always be open (test program see chapter 7.2.).

Information from the keyboard unit is transferred in serial form to the restart input 7.5 of the processor. Display data are sent from the processor to the display/LEDs via data line SDA, clock line SCL and the strobe lines $\overline{LEDEN}$ and $\overline{DISEN}$.

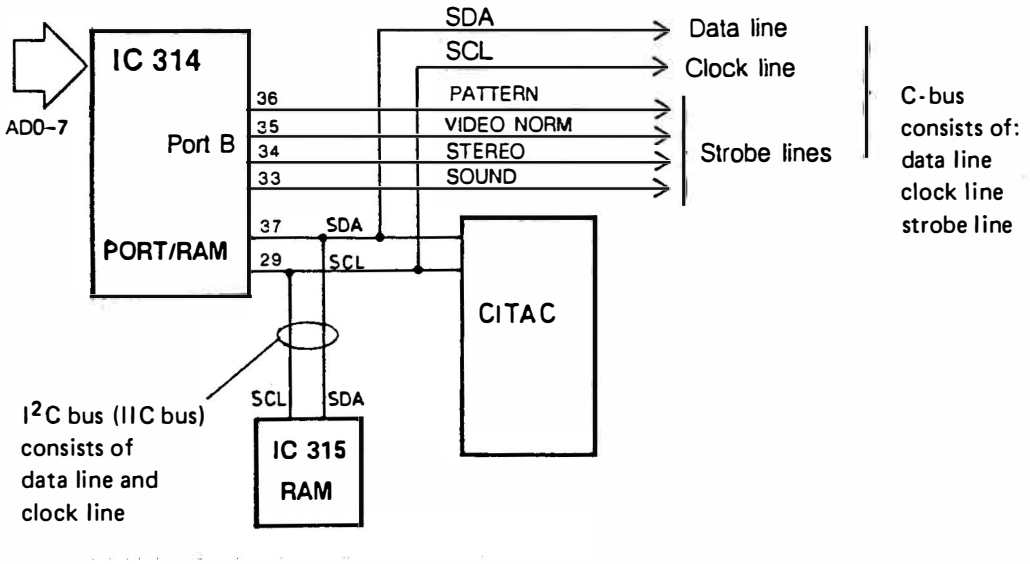

Communication with the subunits is achieved via the IIC bus (RAM, CITAC) and via the C-bus. Because the serial informations which are transferred from the CPU are latched and stored in shift-registers in the subunits respectively in the RAM or CITAC, informations at data- and clock line can only be measured once for a short moment. According to this function it can be useful to use test 6 of the diagnostic program in order to measure at the data line SDA and the clock line SCL. Test 6 enters the binary informations from the PAL/NTSC- and from the SECAM standard switch and sends these informations via the IIC-bus to the display, thus there is a continuous data flow at the lines SDA and SCL.

The circuit 315 is a battery buffered IIC RAM for saving complete parameter set ups. The battery is a 3 V Lithium cell connected via diode 413 to the RAM circuit, thus in case of power off or power break down the DC supply for IC315 is automatically taken over from the battery.

IC 314 – the RAM/port circuit P8155 – contains the working memory for the microprocessor (256 bytes) and all inputs and outputs for controlling the subunits. Communication with the processor is achieved via the address/data bus AD0 – AD7 with the help of the control-signals $\overline{RD}$, $\overline{WR}$, ALE, IO/$\overline{M}$ and Reset.

Port A of IC314 is an input port and enters the status signal from the stereo- and teletext unit and binary codes from the PAL/NTSC- and SECAM system switches. Port B drives the strobe lines and the clock line SCL for the internal C-bus, the data line SDA for this bus is driven by port C/bit 0. This internal C-bus is used to transfer control commands from the processor to the subunits.

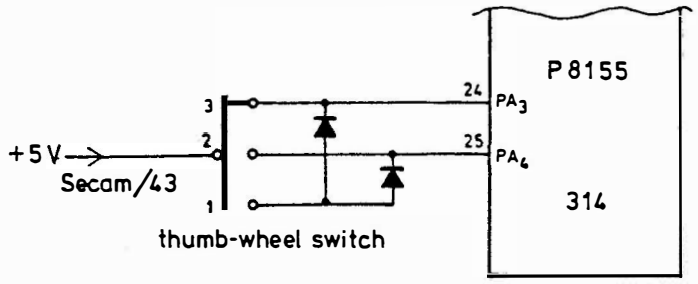

TV system switch pos. (S802)	P_{A4}	P_{A3}
3	0	1
2	1	0
1	1	1

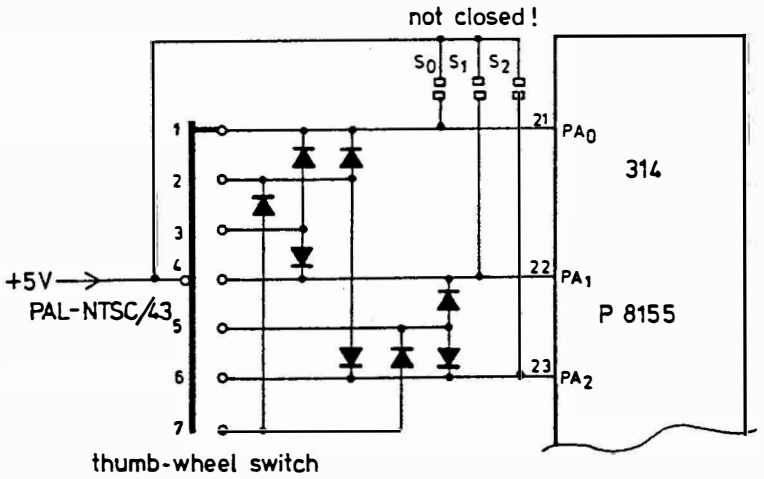

TV system switch pos. (S801)	P_{A2}	P_{A1}	P_{A0}
1	0	0	1
2	1	0	1
3	0	1	1
4	0	1	0
5	1	1	0
6	1	0	0
7	1	1	1

Frequency adjustment and control of the PLL-loop of RF unit 10 is achieved by the CITAC chip 318 (SAB 3036). This computer interface for tuning and control is controlled by the microprocessor via the IIC bus and feeds the outputs to the RF unit 10. For further details of the CITAC see Annexe 12 – 14.

The outputs P10 – P13, P21 and P22 switch the supply voltage for the VCOs which is in addition to it the control voltage for selecting the according low-pass filter. P10 – P13 of IC318 drive the supply- and control voltage directly, P21 (IC318/2) and P22 (IC318/3) are buffered by transistor 319 (CPU) and transistor 307 (RF 10 unit), thus the information at pins 2 and 3 of CITAC are inverted.

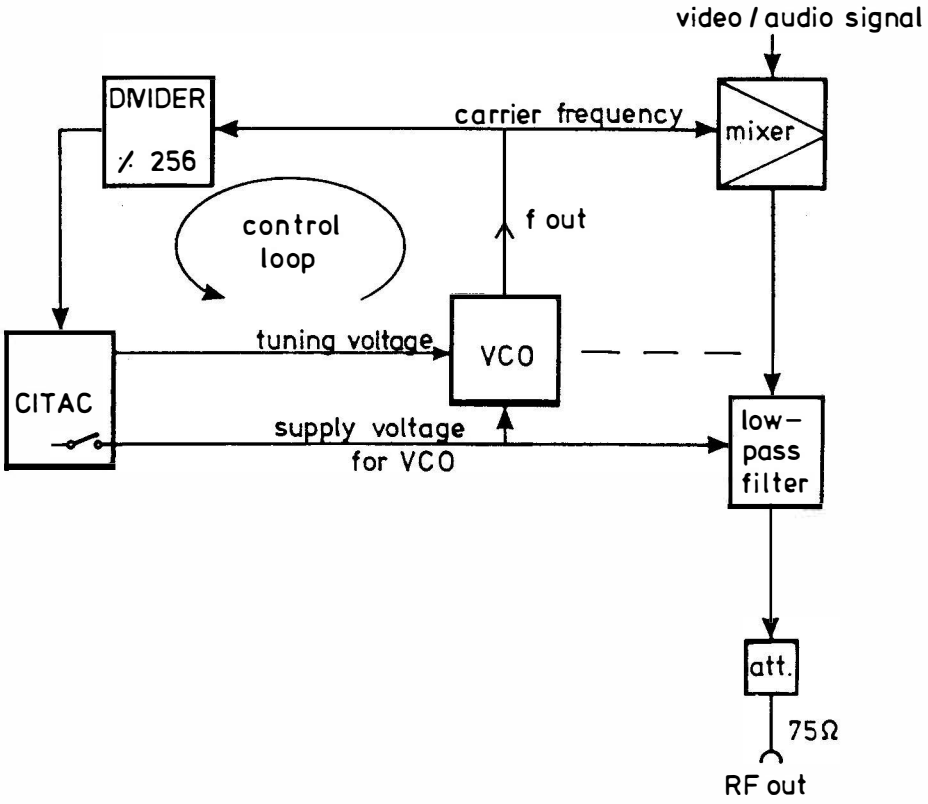

This picture shows the principle of frequency setting and control by the CITAC. In the real circuitry there are six VCOs for the six frequency ranges of the generator and low-pass filters adjusted to the corresponding frequency band.

4.2.3. Master oscillator, universal sync generator, TV system control (part U11)

The master oscillator generates the reference frequencies for PAL (5.000 MHz) or NTSC (5.034 MHz) which clocks the universal sync pulse generator SAA1043. Furthermore subdivided frequencies serve as reference for the subcarrier and sound carrier oscillators. Adjustment of the clock frequency is achieved by trimmer C542 for PAL and C541 for NTSC.

The universal sync generator SAA1043 generates all synchronizing waveforms for the video signal, e.g. composite sync (CS), composite blanking (CB), vertical and horizontal drive (V, H), clamp pulse (CLP), PAL identification (fH/2) and further subdivided horizontal drive frequencies. Details of this circuit as well as the output waveforms are shown in the data sheet in the appendix on pages 12-6 to 12-11.

A different sync pulse generation for the TV standards PAL, NTSC or SECAM is realized by the programming inputs FD, X and Y, see table below. Non-interlacing for test pattern crosshatch is achieved in the 624- or 524-line mode. In this mode the output signals of the first and second frame are identical. Programming information is given by the CPU via the C-bus lines and shift register 321.

To maintain correct relationship between the subcarrier and horizontal scan frequencies the subdivided signals FH80 (1.25 MHz) and FH3 are applied to the subcarrier coupler SAA1044 on unit 2. The required TV system for operation is programmed by three control lines FD, X and FH3. To shift the (R−Y) chroma signal by 180° every line the signal DL (2xfH) is fed from IC324 pin 22 to the colour modulator circuit TDA 2501 (U2). This signal is only present for the PAL systems.
Horizontal and vertical signals H1 and V1 are used among other things for the external trigger output socket. Signals are applied via inverter IC326 to buffer 333 where both signals are added.

TV standard	TV system switch SK801	SK802	IC324 pin no.	FD 7	X 5	Y 6
PAL/CCIR	1, 2, 3, 5	–		L	H	H
PAL-M	4	–		H	H	H
PAL, 624 lines*	1, 2, 3, 5	–		L	H	L
NTSC/NTSC 4.43	6, 7	–		H	L	L
M, 524 lines*	4, 6, 7	–		H	H	L
SECAM	–	1, 2, 3		L	L	L
SECAM, 624 lines*	–	1, 2, 3		L	H	L

* no interlacing (only crosshatch pattern)

Table logic states for TV standard of SAA1043

IC321 pin no.	TV system PAL					NTSC		SECAM			function / to unit
	G	D	I	M	N	NTSC	NTSC 4.43	B, G, H	D, K	L	
4	L	L	L	H	H	H	H	L	L	L	FD to SAA1044, U2
5	H	H	H	L	H	L	L	H	H	H	X to SAA 1044, U2
6	L	L	L	H	L	H	H	L	L	L	FD, SAA1043
7	H	H	H	H	H	L	L	L	L	L	X, SAA1043
13	H	H	H	H	H	H	H	H	H	H	$\overline{\text{VIDEO EXT}}$
14	H	H	H	H	H	L	L	L	L	L	Y, SAA1043
11*	H	L	H	L	L	L	L	L	L	H	PAGE/$\overline{\text{RANDOM}}$, U4
12*	L	H	L	H	H	H	H	H	H	L	$\overline{\text{TELET. ON}}$, U4

test pattern with interlacing

* instruments with teletext

IC331 pin no.	TV system PAL					NTSC		SECAM			function / to unit
	G	D	I	M	N	NTSC	NTSC 4.43	B, G, H	D, K	L	
4	L	L	L	L	L	L	L	H	H	H	SECAM ON, U3
5	L	L	L	L	L	L	L	L	L	H	Video ampl. SECAM L
6	L	L	L	L	L	H	L	L	L	L	NTSC, U2
7	L	L	L	L	H	L	L	L	L	L	PAL-N, U2
11	L	L	L	L	L	H	H	L	L	L	$\overline{\text{PAL}}$/NTSC, U1
12	L	L	L	L	L	L	L	H	H	H	Y-delay $\overline{\text{PAL}}$/SECAM
13	H	H	H	L	L	L	H	L	L	L	PAL/NTSC 4.43, U2
14	L	L	L	H	L	L	L	L	L	L	PAL-M, U2

Table logic states for the TV system control

4.2.4. Luminance summing point, video amplifier, external video input

The luminance summing point (fig. 105) comprises buffers 327 – 329 and resistors 643 – 656. The complete digital luminance data are generated by digital unit 1 and are applied via connection 109 pin 15 – 28 from the motherboard. Furthermore the composite sync is applied by signal CS DEL via buffer 329 pin 15. Signals are weighted in the summing point and fed to the following analog video path (see fig. 107).

Dependent on the selected and available TV systems of the instrument luminance data are different, e. g. signal 'black level offset' is only needed for NTSC and $0.3Y_{R/G/B}$ for the SECAM pattern.

For PM 5515 the analog video path comprises 3 inverting feedback amplifiers which are similar designed. These differential amplifiers are realized by integrated transistor array CA3086 and one transistor BC548 which serves for low output impedance. A zener diode is added to shift the dc output to the input level. The unused transistor array pin 12 – 14 of the first and second stage are connected with the internal substrate to – 12 V.

For PM 5516 and PM 5518 the analog video path is extended by a 4th stage. For all TV systems except SECAM L this stage operates as voltage follower. Only in the SECAM L mode the stage is used as inverting amplifier, for a positive vision modulation is needed.

At the input of the first amplifier stage 335, 339 the luminance signal and the composite sync are summed up. After amplification to 3 Vpp the signal passes a low-pass filter ($\sin^2$-filter) which serves for a defined pulse shaping (HAD = 100 ns); e. g. 2T-pulses (200 ns) are formed during the crosshatch pattern which have a $\sin^2$ waveform, see fig. 12.
At the summing point of the 2nd video amplifier 336, 343 the chrominance signal, circle/multiburst pattern, teletext and external video signal are added. In the NTSC mode the amplification of this stage is reduced by switching-over the feedback-path via FET342.

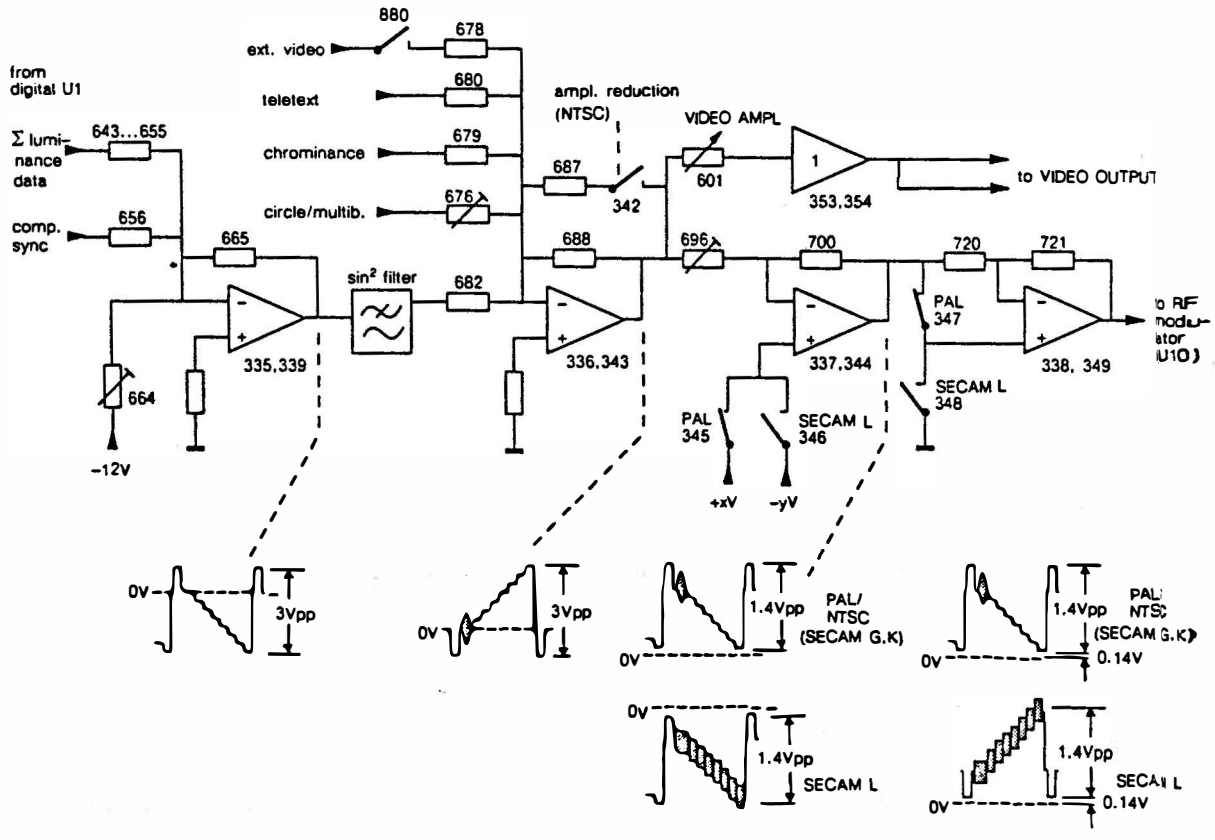

Blockdiagram video amplifier PM 5518

This is necessary because the NTSC system has a black level set-up of 7.5 % and the max. amplitude must not exceed 100 %. From the output 336, 343 the composite video signal CVBS is applied via potmeter VIDEO AMPL (601) and impedance converter 353, 354 to the BNC connector VIDEO OUT and the Scart connector. On a second path the CVBS signal is connected to video amplifier 337, 344, where the signal is inverted and dc shifted (0.14 V) for the modulation input of the RF modulator. This value corresponds to 10 % of the video peak-to-peak signal resulting in a residual carrier of – 20 dB.

In PM 5515 the output signal is fed directly via resistor 720, 721 (1 Ω) to the RF modulator. The non-inverting input of differential amplifier 337 is connected via resistor 742, 717 to ground. All components which are not necessary to generate the SECAM L signal are not fitted, e. g. FETs 345 – 348, level translator incl. transistor 350 – 352 and the 4th video amplifier 338, 349.

The complete video path as shown in the blockdiagram and fig. 107 is mounted in PM 5516 and PM 5518. Additional circuits are necessary for switching over from negative to positive vision modulation (SECAM L). Depending on selected TV system the level translator/inverter controls the 4 FET switches 345 – 348 which switch over the video amplifiers 337 and 338.

For all TV systems, except SECAM L, FETs 345, 347 are switched on by ca. + 12 V of the level translater 350 – 352; FETs 346, 348 are turned off by – 12 V. In this case a positive dc voltage at the non-inverting input of video amplifier 337 serves for a positive dc shift of 0.14 V of the CVBS signal at the output of the video path. The 4th stage operates as a voltage follower. The video signal is applied via FET 347 to its non-inverting input. The output of the video path is connected with the modulation input of the RF modulator unit 10.
In the SECAM L mode FET switches 346, 348 are active while FETs 345, 347 are switched off. The video signal is shifted to negative dc value at the output of video amplifier 337, 344. The final amplifier 338, 349 serves for inverting the signal. Oscillograms of the video signal (e. g. greyscale) are shown in the blockdiagram for the different amplifier stages.

The analog video path has different adjustment facilities: blanking level, amplitude chroma/luminance, multiburst and video signal applied to the RF modulator. Details of the adjustment procedure are shown in chapter 8.4.

In the external video mode the signal output of the video pre-amplifier is connected by reed-relay 880 and resistor 678 to the summing input of video amplifier stage 336, 343.
The video pre-amplifier comprises differential amplifier 396 – 399 with current source 397, sync separator 394, 395 and sync comparator 393. Depending on the dc shift of the external video signal the sync comparator supplies a control voltage to the non-inverting input of differential amplifier 399 by which the sync level is clamped to dc zero at the output. The sync comparator operates on the principle of a sample and hold function. Sampling is achieved by FET400 during sync pulse period applied from the sync separator and hold function is realized by capacitor 226.

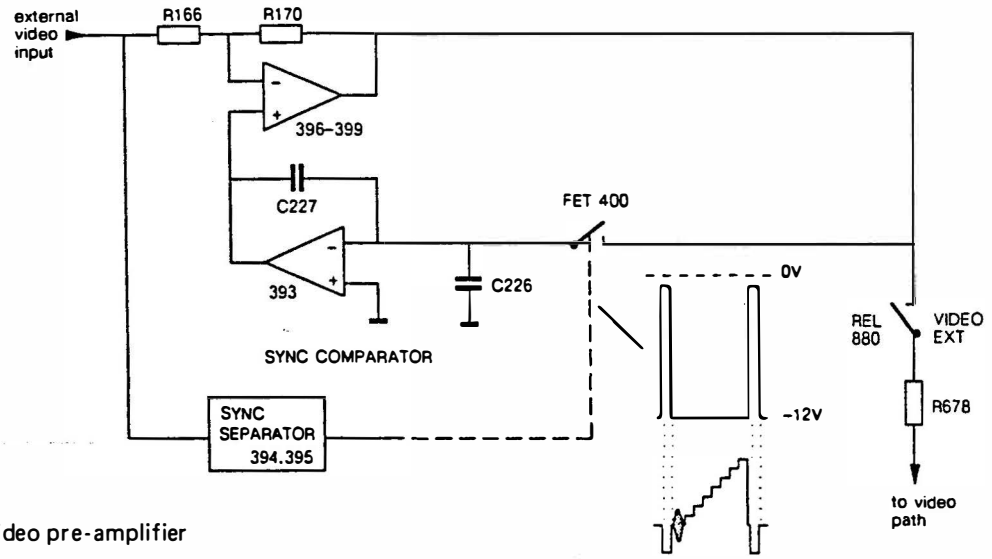

Video pre-amplifier

4.3. Pattern generation (digital unit 1)

The digital test pattern as Centre Cross, Dots, Crosshatch, Checkerboard and the Moving-bar (VCR) are generated by the line pulse generator, field pulse generator and the moving pattern generator on unit 1. These patterns are switched on by the pattern control register IC320 via the C-bus.
The patterns Multiburst and Circle are generated by unit 6.
Furthermore the pattern PROM IC332 contains the data and control pattern of the remaining test pattern. The pattern PROM divides the screen into 8 horizontal and 8 vertical bars; of the first and last horizontal bar one line is only visible on the screen. In the test pattern it's impossible to change in a horizontal test bar from black/white to colour or DEM pattern. Available test pattern and combinations depend on software version.

4.3.1. Fault finding procedure in the pattern generation circuit

For fault finding in the pattern generation part please follow the shown 'pictograms' to detect the single line and field elements of the appropriate test pattern. The procedure provides that the following analog video path (motherboard) is not defective.

Please carry out the following preparations:

1. The supply voltages and the CPU on the motherboard (U11) should be checked first.
2. Plug in the digital unit 1 via the extension test board to have good access to the components.
3. Unsolder resistor R781 (1 kΩ) on the motherboard at ground side and connect the removed side to a test lead (about 50 cm).
4. Connect the RF OUTPUT of the generator resp. VIDEO OUTPUT to a TV receiver or monitor.
5. Select test pattern 'BLACK'; all test patterns are switched off. The screen shows white pattern in this configuration.
6. Connect the test lead to the indicated test points and check for correct indications as shown.

In case of fatal faults in the output path of unit 1, e.g. pattern PROM, pattern/control latches and the following video amplifiers (U11) the procedure shown above may be not sufficient. Please check then the shown oscillograms on page 4-12 and detect signals in the following circuits by an oscilloscope.

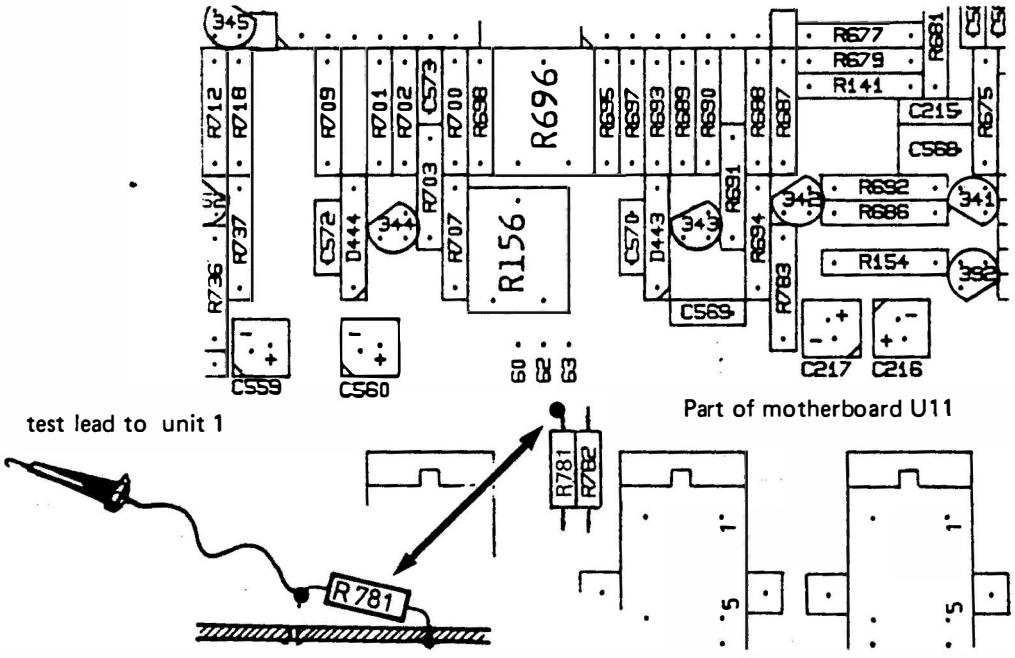

Preparing fault finding by pictograms

Detailed information of pictograms digital unit U1 (PAL)

Line pulse and field pulse generation

IC312 pin 11 20 fH	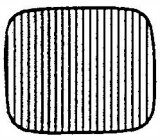	32 vertical BW pattern starts with black on the left
pin 12 40 fH	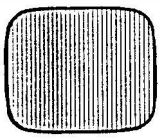	64 vertical BW pattern starts with black on the left
pin 13 80 fH	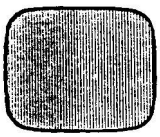	vertical BW pattern, double of pin 12 starts with white on the left
pin 14 160 fH	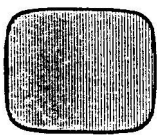	vertical BW pattern double of pin 13
pin 15		17 vertical lines on black pattern
IC313 pin 11	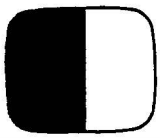	see fig.
pin 12 2.5 fH	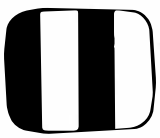	see fig.
pin 13 5 fH	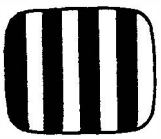	see fig.
pin 14 10 fH		16 vertical bars starts with black on the left (symetr.)
pin 15	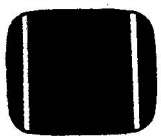	2 border lines on black pattern

IC314 pin 11		24 black horizontal lines (ca. 5 mm) on white pattern
IC314 pin 15		24 white horizontal lines on black pattern
IC315 pin 11		see fig.
pin 12	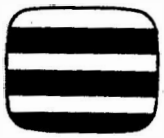	see fig.
pin 13		12 horizontal bars beginning with black on top side
pin 14		24 horizontal bars beginning with black on top side
pin 15		see fig.

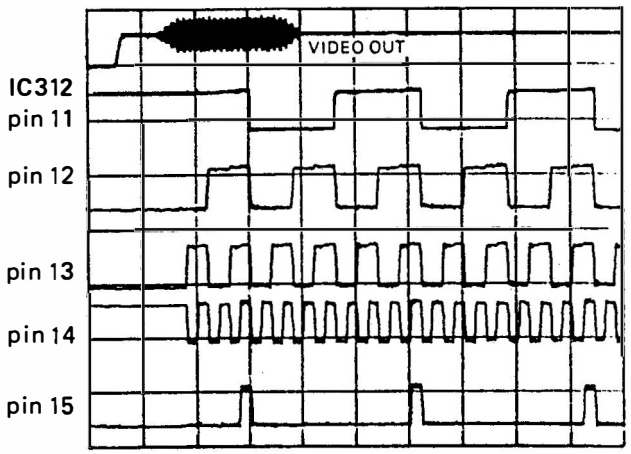

1 µs/div.

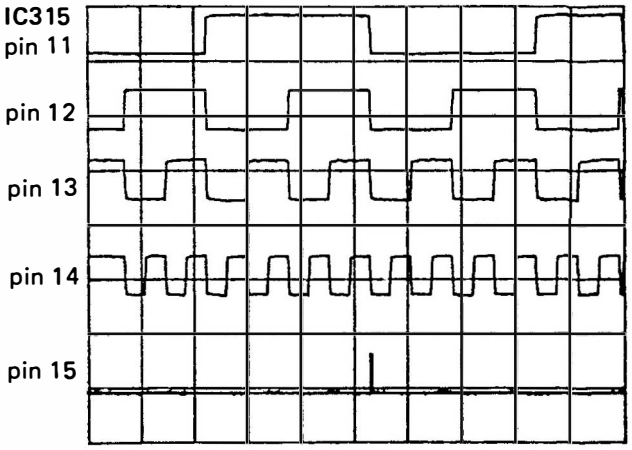

2 ms/div.

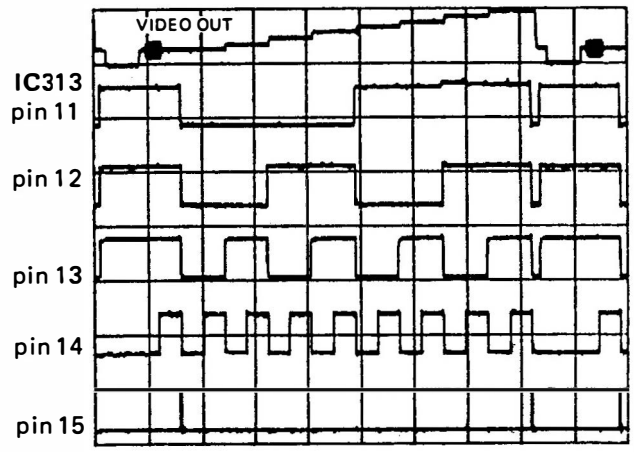

ca. 7.5 µs/div.

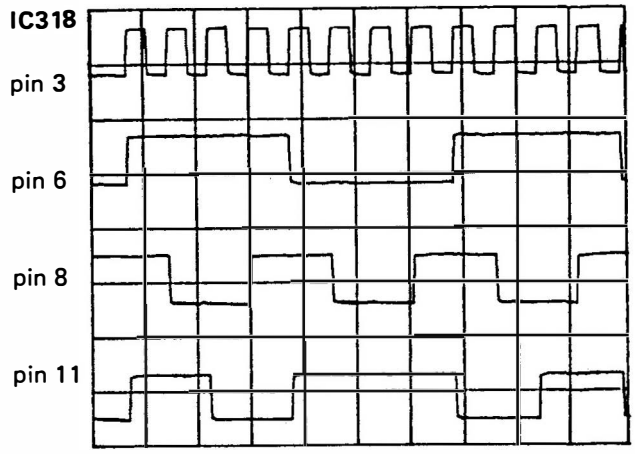

2 ms/div.

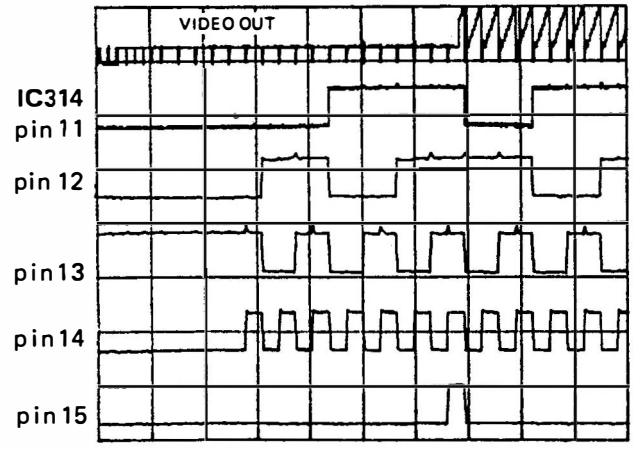

0.2 ms/div.

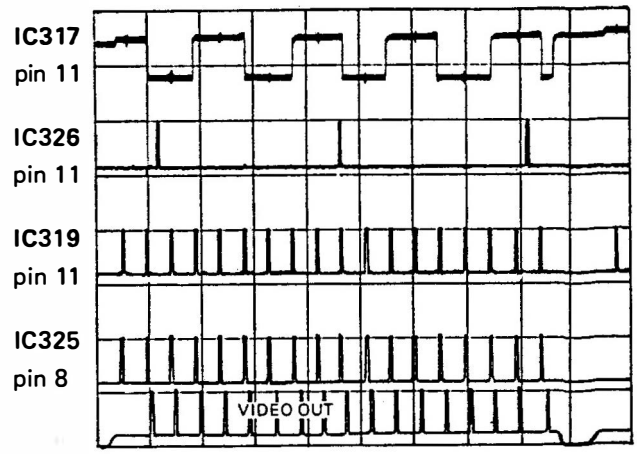

ca. 6.8 µs/div.

AMPL/DIV: 5 V (video signal 1 V)

Video signal only shown as trigger reference

Oscillograms unit **1**, line/field pulse generation (PAL)

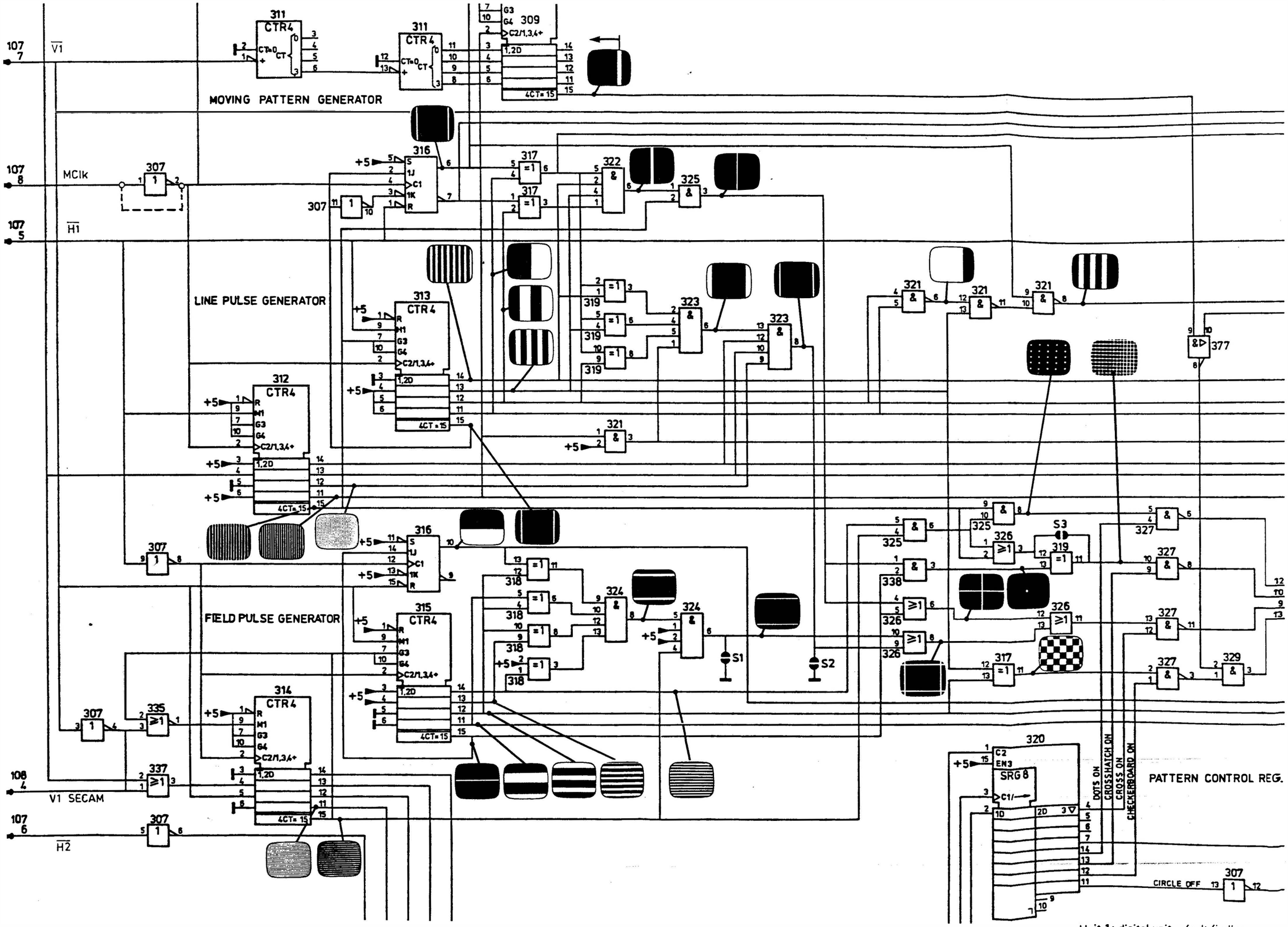

Unit 1: digital unit, fault finding

4.4. PAL/NTSC unit (U2)

The PAL/NTSC unit 2 consists of a voltage controlled oscillator for 4 different subcarrier frequencies for the TV systems, the subcarrier coupler SAA1044, the U/V-matrix for generating colour difference signals followed by a low-pass filter, the PAL/NTSC encoder TDA2501 and a switchable band-pass filter for 4.4 MHz and 3.5 MHz. For detailed information of both ICs see Annexe, chapter 12.

The subcarrier frequency is generated by a VCO in a phase locked loop. The PLL comprises the VCO 319 with current source 320, level control circuit 306/1 – 3, subcarrier coupler 307 and active low-pass filter 306/5 – 7. According to the selected TV system the FET switches 325 – 328 are switched on by the TV system control (U11) to activate the appropriate crystal 781 – 784. The crystals for PAL–N and PAL–M are built-in only in the special versions.
The subcarrier coupler SAA1044 (IC307) provides exact relationship between the subcarrier and horizontal scan frequencies. The signal FH80 = 1.25 MHz is applied from the sync generator SAA1043 (U11) and serves as reference. Furthermore the output signal of the subcarrier is applied to IC 307 pin 7. The built-in phase comperator provides an output at PH1 which is used to control the VCO via the active low-pass filter 306/5 – 7.
To get a correct subcarrier coupling for the different TV systems the inputs X, FD and FH3 of IC307 are programmed by the TV system control (U11, fig. 105). Thus the subcarrier frequencies need no adjustment. Details are shown in the table below.

standard	FD	X	FH3	relationship of subcarrier frequency (f_S) to horizontal scan frequency (f_H)
PAL	0	1	400 Hz	$f_S = 283.7516 f_H$
PAL–N	1	1	400 Hz	$f_S = 229.2516 f_H$
PAL–M	1	0	1	$f_S = 227.25 f_H$
NTSC	1	0	0	$f_S = 227.5 f_H$

Positive logic: 1 = HIGH; 0 = LOW

The complete chroma data from the digital unit 1 consisting of the burst signals, the vector informations Q, I, U and V, saturation signals $2^0/2^1/2^2$, G–Y = 0 and the RGB signals are applied to the U/V-matrix. These signals are weighted and summed up to generate the two colour difference signals R–Y and B–Y. Both signals are fed via low-pass filter paths to the inputs 5 and 12 of the modulator circuit TDA2501.
This circuit encodes the colour difference signals R–Y and B–Y onto one subcarrier. Quadrature modulation allows the coding to be in accordance with either the PAL or the NTSC system. Clamping the output and correcting the out-of-balance of the modulators in done by applying the line sync pulse to input 7. In the PAL system the $0^o/180^o$ line by line phase shift of the (R–Y) chroma signal part is achieved by the fH/2 signal at pin 8.

Furthermore the control signal 'PAL–G' (applied via print connector 27 and line 'a') turns on transistor 311 and relay 801 to adjust the 90°-phase shift of TDA2501 and the band-pass filter to 4.4 MHz.
The subcarrier signal generated by the subcarrier VCO is applied via transistor 322 to input 1 of the modulator circuit. To obtain a 90° phase shift of the carrier (B–Y) the RC combination C510/R638 is used between pins 2 and 15.
Adjustment of the colour difference signals (B–Y) / (R–Y) is done by trimpot R633 and the correct phase E_V to E_U is achieved by capacitor C509 (see table checks and adjustment seq. 5.6 – 5.7.).

The complete chroma signal is available at pin 9 of the modulator/encoder circuit and is passed via the 4.4 MHz band-pass filter via transistor 316 to the CHROMA OUT pin 26 of the PAL/NTSC unit. The band-pass filter suppresses the d. c. components of the (R−Y) + (B−Y) signal.

For the NTSC and PAL systems with subcarrier frequencies of 3.5 MHz the control signal via line 'a' is not present: thus transistor 311 and relay 801 are switched off. The 90° phase shifted carrier of TDA2501 and the band-pass filter are switched over. In this case transistor 313 is turned off, capacitor C515 is switched on by diode 404, so band-pass filter is adjusted to 3.5 MHz.

During NTSC the control signal fH/2 at pin 8 is changed to d. c., thus the phase shift of the R−Y modulator is switched off to 0°.

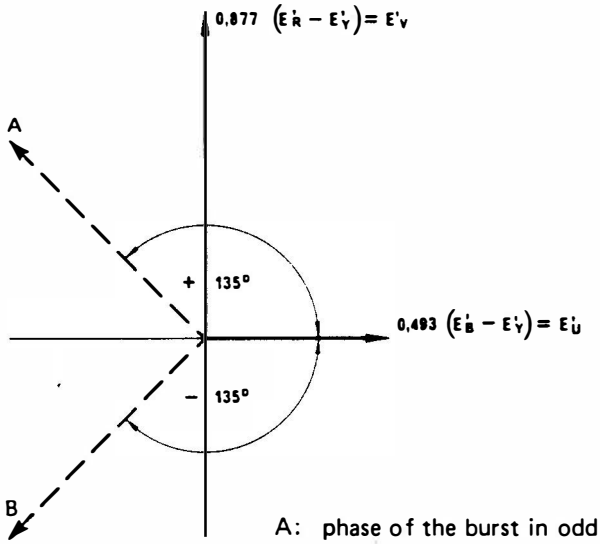

A: phase of the burst in odd lines of the first, second, fifth and sixth fields and in even lines of the third, fourth, seventh and eighth fields

B: phase of the burst in even lines of the first, second, fifth and sixth fields and in odd lines of the third, fourth, seventh and eighth fields

PAL systems

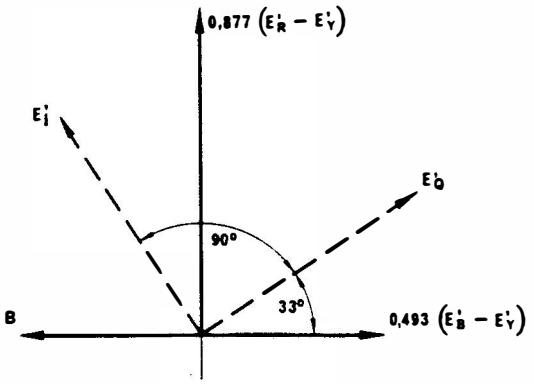

B: phase of the burst

NTSC system

Chrominance axes and phase of the burst

4.5. SECAM unit (U3), see fig. 111 and block diagram fig. 111A

The SECAM unit consists of the FM Modulator Controller TDA2507, IC312, and the SECAM Encoder TDA2506, IC313. For detailed information of both ICs see Annexe, chapter 12.

The signals from the digital unit at socket 108, those are the colour bar as well as the '30 % colour bar' and the greyscale signals, are weighted in the summing circuitry according to the SECAM system D'R = 1.9 (ER – EY) and D'B = 1, 2 3 (EB – EY). These signals are fed to the SECAM Encoder which produces sequential, frequency modulated colour signals, controlled by the clock pulse Clp, the horizontal and vertical sync pulses and the chrominance blanking (BC) signals from the sync pulse generator IC324 on the digital unit.

Band limitation and low-frequency pre-emphasis are achieved between pins 6 and 5 of IC313, and the high-frequency pre-emphasis, consisting of the 'anti-bell filter' and band-pass filter, between pins 23 and 3.

The IC312, FM Modulator Controller TDA2507, generates the two sub-carriers for FM modulation, which are locked to fH in two PLL circuits. The PLL filters are connected to pin 12 and pin 16. IC312 also demodulates the frequency fed from IC313 pin 23 to IC312 pin 1 and produces a control voltage depending on the center frequency of a DR- or DB-line and an active line.
The sequence is: 2 lines 4.40625 MHz – 1 line FM signal of D'R –
2 lines 4.25 MHz – 1 line FM signal of D'B –
and so on, see figure below.
This voltage, low-pass filtered, synchronises the FM modulator of IC313.

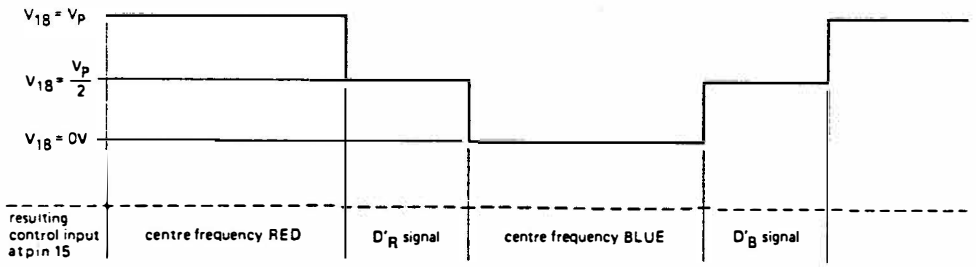

Timing pulse output (pin 18) and resulting control input (pin 15).

4.6. Y/C & RGB unit (U5A)

For unit 5A the complete luminance data are applied from the digital unit 1. The five output signals R – G – B, subcarrier and sync signal are connected via coax cable directly to BNC sockets at the rear side. Depending on the selected TV system the subcarrier frequency and video levels are switched over (see technical data). For SECAM the subcarrier output is not used.
The luminance and chroma signals are applied separately to the Y/C output connector.

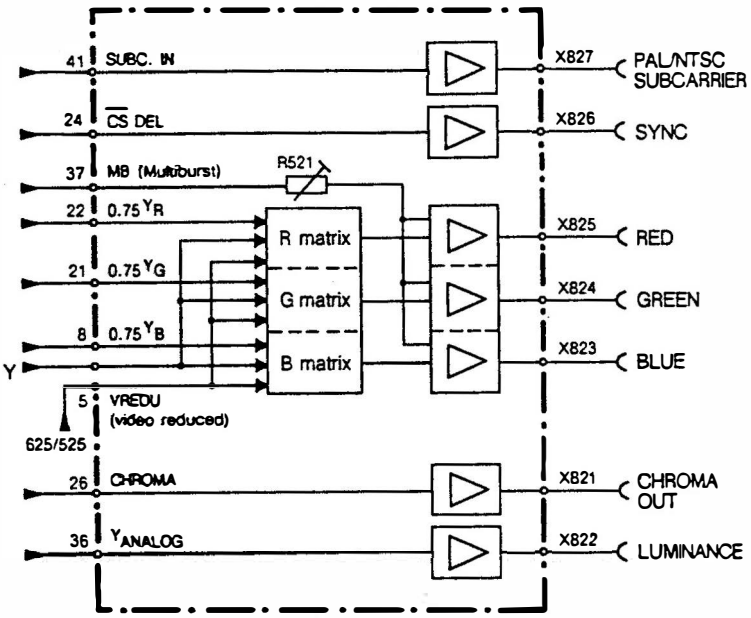

Block diagram Y/C & RGB Unit

The **luminance data** are weighted in the three summing points RED (V101), GREEN (V201) and BLUE (V301). Control signals 'black level offset' and 'VREDU' (reduced video ampl.) are necessary for TV systems PAL/NTSC M. The luminance signal Y + 0.25 is used for PAL I only.
The single colour components are applied via $\sin^2$ filter paths (fu = 2 MHz) to the three output stages R, G, B. The filters serve for signal shaping of the leading and trailing edges espec. for the crosshatch pattern (pulse width 200 ns).
The output stages consist of differential amplifiers N101, 201, 301 with current source and output amplifiers V103, V203 and V303. Z-Diodes V102, V202 and V302 serve for level shift of the dc-coupled outputs. The output impedance is 75 ohms.

In order to avoid high frequency cut-off for the multiburst pattern this signal is applied separately to the output stages. Adjustment is possible by trimpot 521.
The **sync signal** '$\overline{CS}$ DEL' is fed via driver D102 and differential amplifier V541, 542 to the SYNC output. Furthermore it's possible to have the sync signal in GREEN by setting jumper X002 to ON-position at the pcb.

The **PAL/NTSC subcarrier** signal is applied via buffer V531 to the BNC output; amplitude: 1 Vpp into 75 ohms.

For the Y/C-output the **luminance signal** is applied via buffer V401, 450 and inverting feedback amplifier N401A to the Y-output. The multiburst signal is fed separately to amplifier N401A. The dc-coupled output generates a signal of 1 Vpp into 75 ohms.

The **chroma signal** is fed via inverting amplifier stage V511, 513 to the ac-coupled output. In the NTSC mode the gain of the luminance and chroma path are reduced by switching-over the feedback path via FETs V404 resp. V512.

For detailed checks and adjustment of this unit please follow table 8.4, sequence 12.1 to 12.40. Signals and amplitudes for the different test pattern are shown in fig. 31 - 56.

4.7. Multiburst/Circle unit U6, Fig. 119

The multiburst generator comprises a counter, a summing amplifier, current sources for the subsequent triangle generator, a sine shaper and a start/stop circuit. On each TV line the circuit delivers 8 packages of sine waves.

A counter with subsequent summing amplifier deliver a staircase signal which in a triangle generator is converted into packages of sinewaves with stepwise increasedfrequencies from 0.8 to 4.8 MHz.

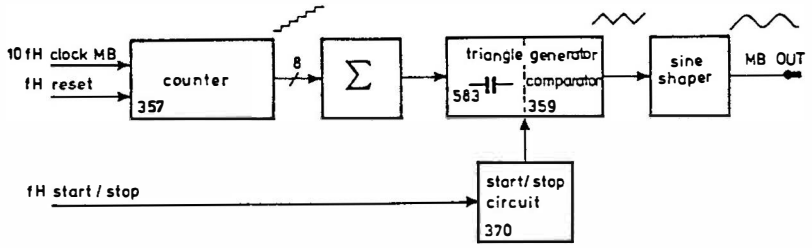

The Johnson counter 357 is clocked by 10 fH and reset after each line. Depending on the status of the counter the currents through resistor 347 for 0.8 MHz multiburst frequency, 748 for 1.8 MHz to res. 754 for 4.8 MHz are summed up in the amplifier 358 pin 2, resulting in a current through transistor 364 or 2i. Via current mirror 358 pin 10 a current i is driven through trans. 372. So depending on the on/off state of transistors 365/366, controlled by comparator 359, $(2i - i) = i$ or $(0 - i) = -i$ is flowing through charging capacitor 583 of the triangle generator.
The reference voltage of the comparator at pins 11 and 1 is set to ca. ± 1 V.
Via decoupling FET 367 the zero-symmetrical triangular wave is present at transistor 368 and converted into sine wave at the MB OUT connection 29 by the sine shaper.
The multiburst frequency, i. e. the charging current of the generator, is adjusted at 3 MHz by potmeter 757, seq. 3.2, 'Table of checks and adjustments'.
The amplitude of the multiburst signal is set by potmeter 676 on the main unit 11, fig. 107.

The START/STOP signal is sent via connection 14. If the stop signal is active, transistor 370 and so diode 448 conduct, so that at the output of transistor 372 a low dc-voltage (DC OFFSET) is fixed. This prevents the comparator 359 to switch over: the oscillation of the triangle generator stops.
The dc portion within the multiburst signal is set to zero by potmeter 786.

The **circle generation** is achieved by two pulses, which at the intersection line/circle are two times actuated by the comparator during the active line time. With increasing number of lines in the upper part of the frame e. g. the distance between two pulses is automatically augmented with respect to the central row.

Double integration by the line- and field integrators 380, 382 and 381, 383, causes parabola in line and picture deflections, see next page. The control is organized by the horizontal H1 and vertical V1 pulses derived from the sync pulse generator, IC324 pin 23 and 19 on the main unit 11. The TV system control, IC321 pin 6 on the main unit 11 switches either to 625 line or 525 (NTSC) line system, connection 9. Transistor 377 inverts the signal. For 525 lines transistor 378 switches resistor 112 in parallel to 115 while transistor 379 parallels res. 113 to 117.
The addition is achieved via resistor 128, 130.
The ellipticity is adjusted by potmeter 129.
The horizontal position is adjusted by potmeter 114.
The vertical position is adjusted by potmeter 116 (120 for NTSC).

Forming the circle: The comparator 384/385 is adjusted by 136 so that transistor 384 is cut off and 385 conducts. When the added parabola voltages are exceeding the comparator level, the current of the difference stage is taken over by transistor 384. Approaching the comparator level from higher voltages the same effect results in reverse direction. So at the common cathode pulses of half the diode forward voltage origine. The different thickness of the circle, when selecting white or black circle, is achieved by the differentiations within the decoupling stages 387 and 388.

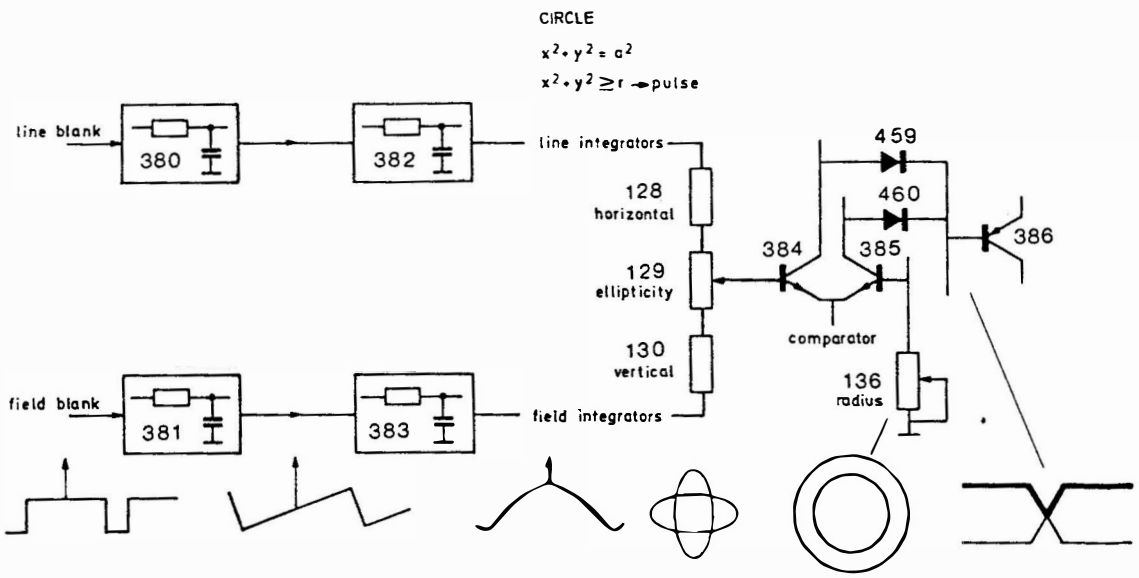

Forming the circle control pulse

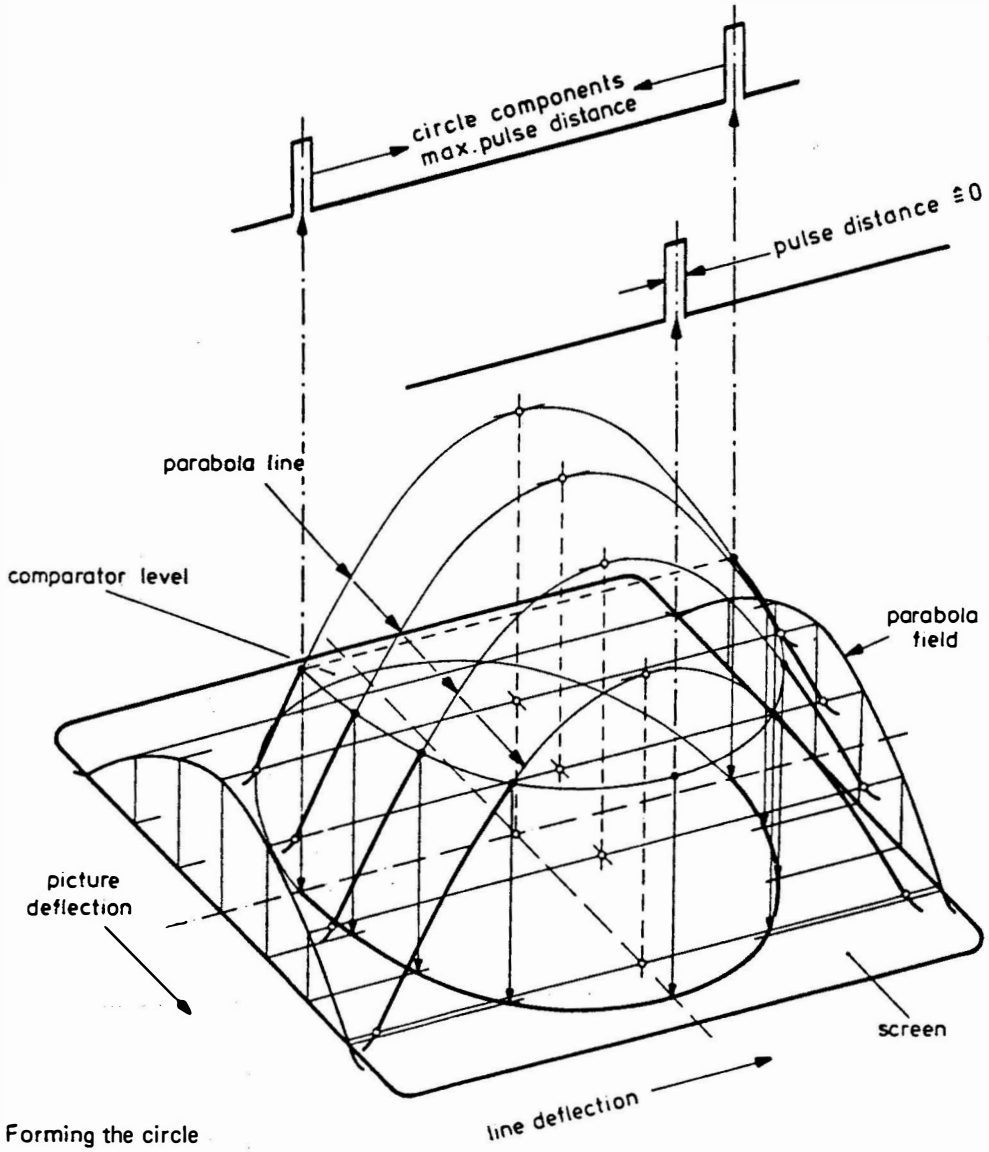

Forming the circle

4.8. Sound units

Depending on the type of instrument different sound units are built in. The stereo/dual sound versions PM 5515/PM 5518 indicated by an 'X' in the typenumber are equipped with two sound units: LF stereo sound (U7) and RF stereo sound (U8). All other instruments and PM 5516 are equipped with the Mono sound unit 9 instead (see Fig. 103 'Units on Main Print').

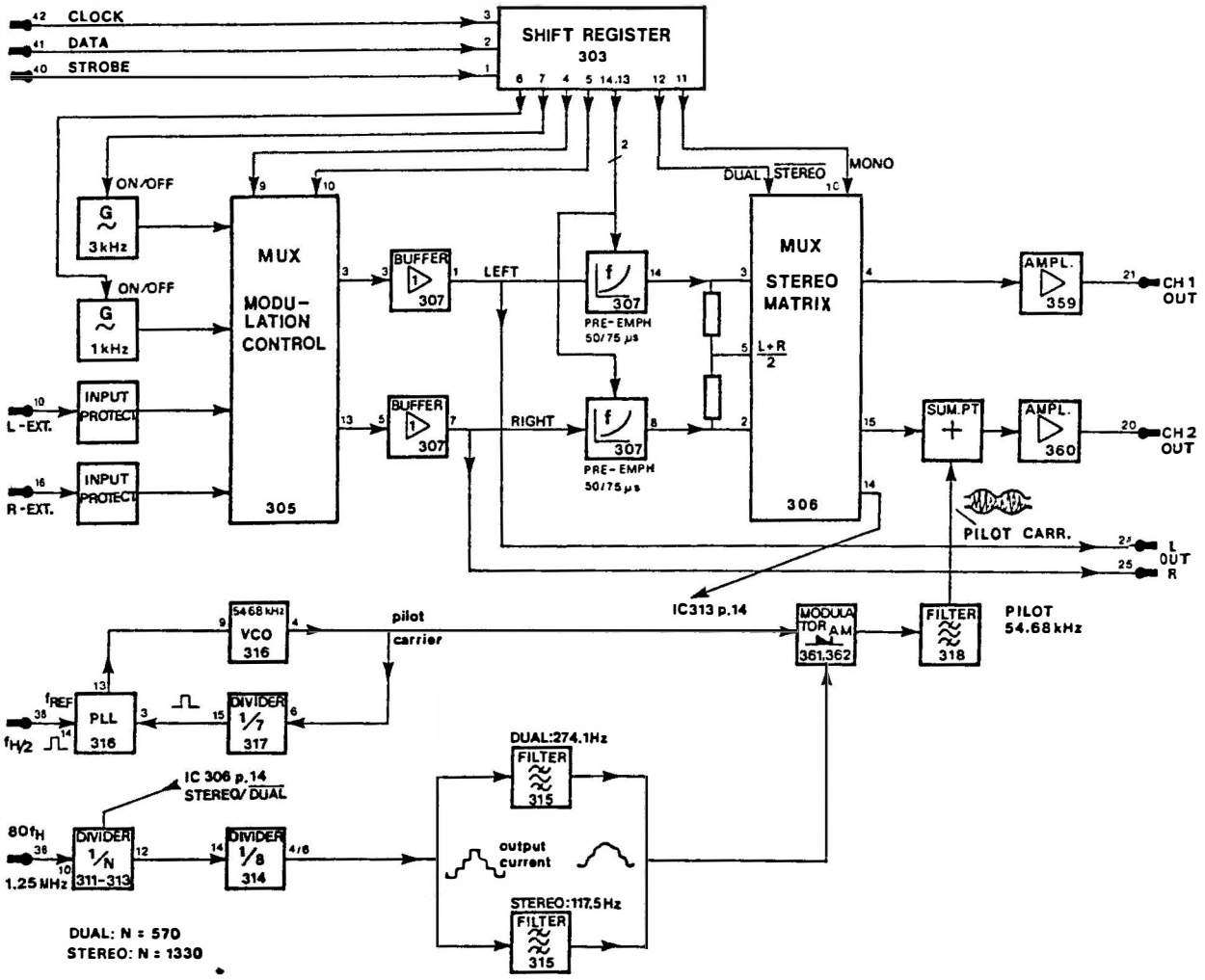

Block diagram LF dual/stereo sound (U7)

LF dual/stereo sound unit (U7)

Depending on the selected sound mode unit 7 generates the audio frequencies 1 kHz and 3 kHz as well as the pilot carrier 54.68 kHz and the two identification frequencies 274.1 Hz/117.5 Hz in the DUAL/STEREO mode. The line frequency serves as reference. The mode dual and stereo are only possible if the instrument is set to the TV system PAL G. The different sound modes are controlled from the CPU via C-bus lines DATA (SDA), CLOCK (SCL) and STROBE by the shift register 303 (see following table of logic states).

The internal audio frequencies 1 kHz and 3 kHz are generated by two RC oscillators based on the Wien-bridge principle. The 1 kHz oscillator is switched on by transistor 354 while array 301/6–8 serves for decoupling the differential amplifier 301/1–5. Via emitter-follower 301/9–11 the signal is applied to amplitude control 401, 402, C504; so stability of frequency and amplitude is achieved.

The 3 kHz oscillator is switched on by transistor 351. Components and circuitry are almost identical to the 1 kHz oscillator.

In the mono sound mode the 1 kHz or 3 kHz signal is applied to channel 1 via modulation control switch 305, buffer 307, pre-emphasis, stereo matrix 306, output stage 359 to the output CH1. Furthermore the internal generated audio signals 1 kHz/3 kHz are available at the Scart output socket.

For external sound modulation the signal is applied via the AUDIO input socket to the modulation control switch 305. Input protection is done by Z-diodes 405, 406 and 410, 411.

In the stereo sound mode both audio signals are applied via modulation control switch 305 to the left channel (CH1) and the right channel (CH2). For channel 1 the stereo matrix 306 delivers the sound signal (L+R):2 via resistors 651, 652. For channel 2 the modulated pilot carrier is added to the audio signal at output amplifier 360.

In stereo/dual sound mode the pilot carrier frequency of 54.6875 kHz (3.5 x fH) is generated in a phase locked loop (PLL) by circuit 316 and divider 317 (N = 7). This signal is compared with the reference frequency fH/2 by the PLL circuit. The pilot carrier is fed via resistor 687 to the AM modulator 361, 362.
Furthermore the identification frequencies of 117.5 Hz (stereo) and 274.1 Hz (dual) are realized by dividing down the signal 80fH = 1.25 MHz by IC311–314. Signal 80fH is generated by the sync pulse generator SAA 1043 (U11). In stereo mode the division ratio is set to N = 1330 for IC311–313 and N = 8 for IC314. In the dual mode the programmable divider 311–313 is switched over to N = 570 by the stereo matrix 306 pin 14. The identification signals are applied via active filters 315 to the AM modulator.
Unit 7 needs no adjustment.

IC303	TV System						
	PAL		NTSC		SECAM		
pin no.	G, D, I	M, N	M	4.43	B, G, H, K	L	function
13	H	L	L	H	H	L	pre-emphasis 50 µs/75 µs
14	L	H	H	L	L	L	

pin. no.	1 kHz ON/$\overline{\text{OFF}}$	3 kHz ON/$\overline{\text{OFF}}$	remarks
6 •	H		sound oscillators
7		H	

pin. no.			1 kHz L	3 kHz L	1 kHz R	remarks
4	5	6				
L	L	H	–	x	x	left and right channel
L	H	H	x	–	x	
H	L	H	x	–	–	
L	L	L	–	x	–	
H	H	L	ext. sound modulation			

pin. no.	MONO	DUAL	STEREO	remarks
11	H	L	L	stereo matrix, modulation pilot carrier
12	H	H	L	

Table logic states of shift register IC303, LF dual/stereo sound unit (U7)

4.9. RF dual/stereo sound unit (U8)

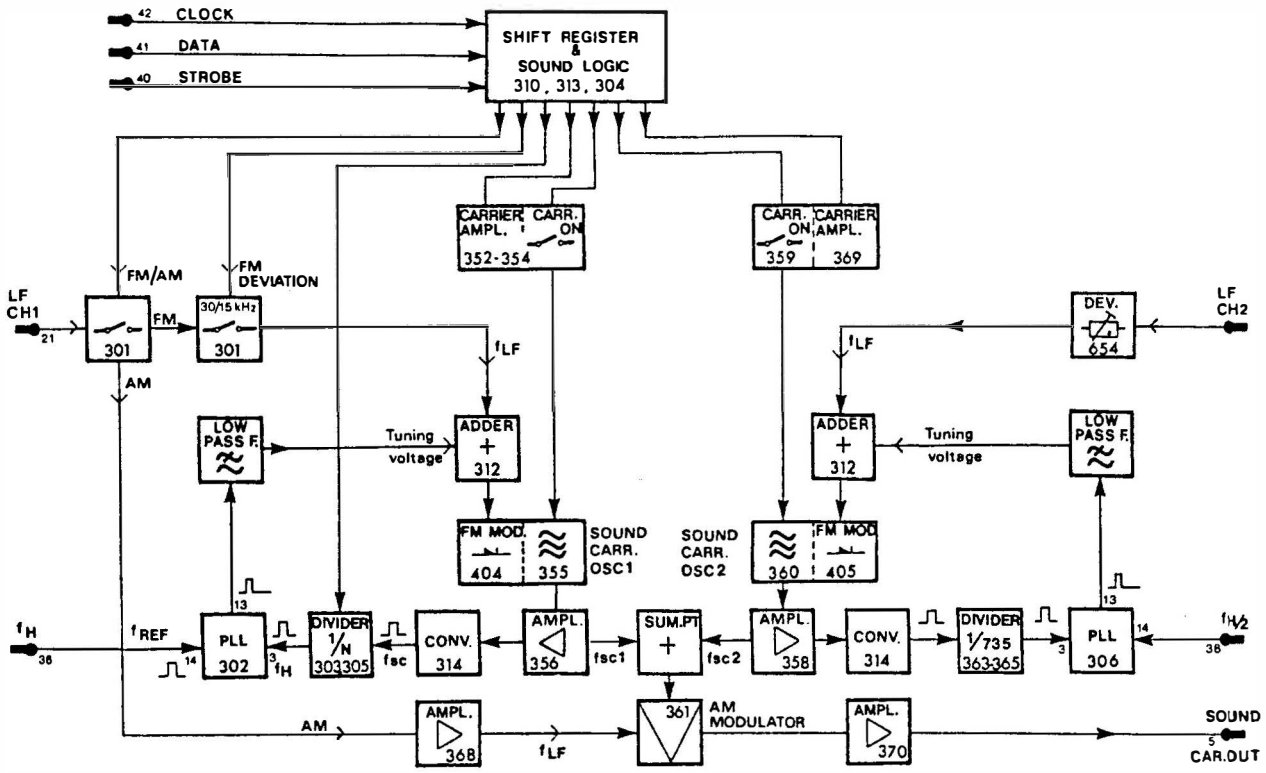

Blockdiagram RF dual/stereo sound unit (U8)

In general unit 8 comprises the same circuitries as the mono sound unit 9 (see chapter 4.12.) and generates the sound carrier 1 frequencies 4.5/5.5/6 and 6.5 MHz according to different TV systems. The 1 kHz sound oscillator and pre-emphasis are not present. These parts are built into the LF dual/stereo sound unit (U7).

Unit 8 is controlled from the CPU via the C-bus lines DATA (SDA), CLOCK (SCL) and STROBE. Dependent on the chosen TV system shift register IC310 and sound logic IC313 select frequencies for sound carrier 1, modulation and carrier level. Sound carrier 2 is additionally controlled by IC304 and transistor 369. The logic states are shown in the following table.

The sound carrier 2 frequency 5.742 MHz is generated in a Phase Locked Loop (PLL) by VC02 if the instrument is switched to the modes DUAL or STEREO. For the PLL the carrier signal is applied via amplifier 358, converter IC314 to the programmable divider IC363 – 365 to divide down to half the line frequency (N = 735). This signal is compared in the PLL circuit 306 with the reference frequency f H/2, generated by the sync pulse generator. SAA1043 (U11). IC306 generates a control voltage at output pin 13 which is applied via a low-pass filter, summing amplifier 312 to varicap 405 to tune the VC02. For FM modulation the audio signal is fed via input 'LF CH2', summing amplifier 312 to the varicap 405 of VC02.

Sound carrier 1 and sound carrier 2 are summed up at resistors 655, 656, applied via the output amplifier 361 and 370 to the RF unit 10.
For SECAM L the audio signal is applied via the AM path, amplifier 368 to the output amplifier which acts as AM modulator.

Further frequencies, e. g. 6.742 MHz of sound carrier 2, are prepared (lines E and D) but are not activated by the software.

A rough check of the stereo/dual function is possible by a TV including stereo facilities. For accurate adjustment of deviation sound carrier 2 especially minimum cross-talk of the two channels special test equipment is necessary, e. g. R&S Stereo Demodulator AMF 2.

IC310 pin no.	TV system PAL					NTSC		SECAM			function
	G	D	I	M	N	NTSC	NTSC 4.43	B, G, H	D, K	L	
4	H	H	L	H	H	H	H	H	H	H	
5	L	L	H	L	L	L	L	L	L	L	
6	H	L	L	L	L	L	L	H	L	L	
7	L	L	L	L	H	L	L	L	L	L	
11	L	H	L	H	H	H	H	L	H	H	
12	H	H	H	H	H	H	H	H	H	H	carr. 2 ON/$\overline{\text{OFF}}$
13	L	L	L	L	L	L	L	L	L	H	AM/$\overline{\text{FM}}$
14	L	L	L	H	L	H	H	L	L	L	
IC304 pin no.											
12	L	L	L	L	L	L	L	L	L	L	
IC313 pin no.											
3	H	H	H	H	H	H	H	H	H	H	carr. 1 ON/$\overline{\text{OFF}}$
4	H	L	H	L	H	L	L	H	L	L	
11	L	L	L	H	H	H	H	L	L	L	

Table logic states shift register IC310, sound logic IC304, 313

Logic states and division ratios of the progr. divider VC01 are shown in the next chapter 4.12.

4.10. Mono sound unit (U9)

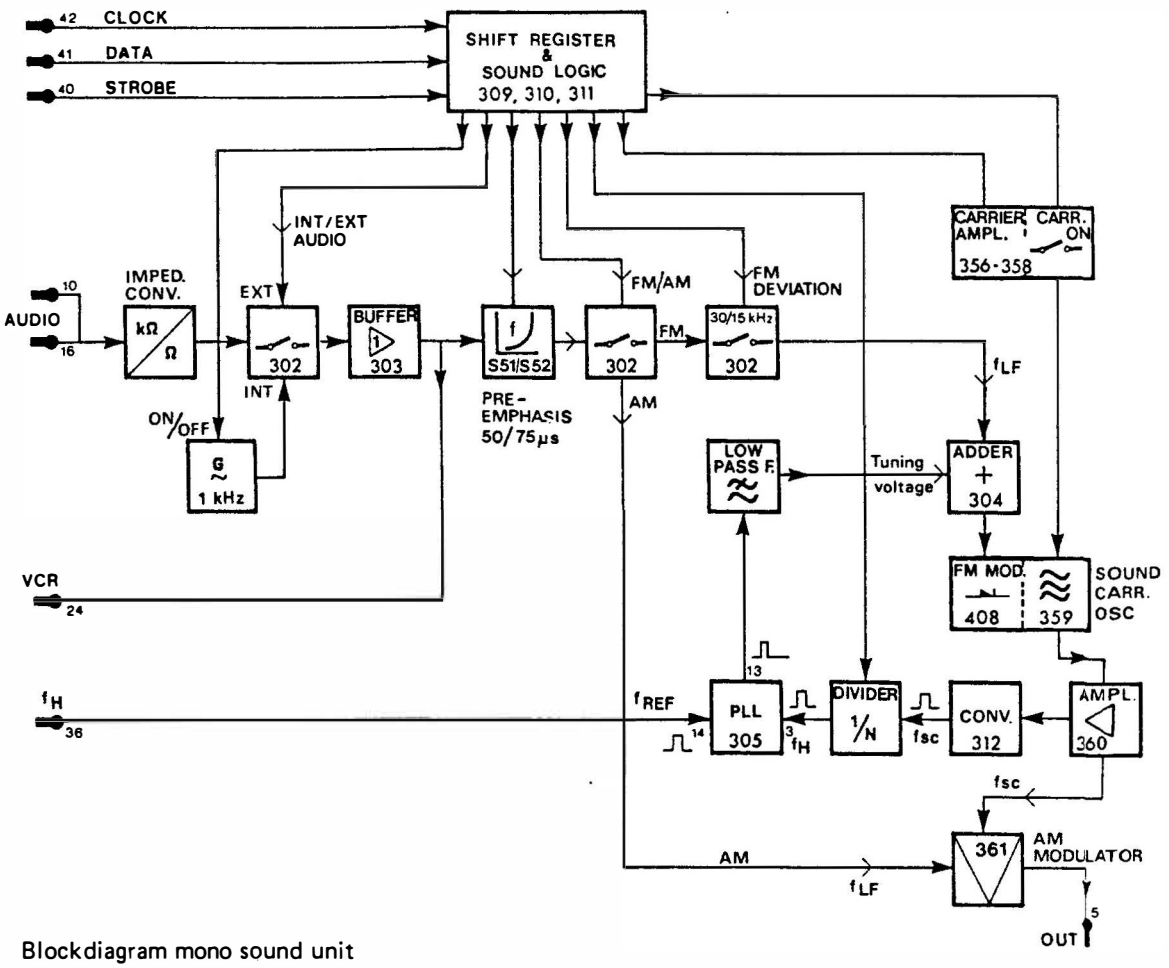

Blockdiagram mono sound unit

The mono sound unit comprises a sound logic for different TV systems, the sound oscillator (1 kHz), input circuitry for external sound signals, programmable sound carrier oscillator and the AM/FM modulator.

Unit 9 is controlled from the CPU via C-bus lines DATA (SDA), CLOCK (SCL) and STROBE. Dependent on the chosen TV system the shift register IC309 and sound logic IC310, 311 select the sound carrier frequency, level and modulation deviation. The logic states are shown in the following table.

The 1 kHz oscillator is a RC oscillator based on the Wien-bridge principle, the components of which are R615, C507, R616, C508. Transistor array 301/6 – 8 is added for switching and decoupling the diffential amplifier 301/1 – 5. Via emitter follower 301/9 – 11 the decoupled signal is fed to the amplitude control 401, 402, C504; so stability of oscillation and amplitude is achieved. The oscillator is switched on by transistor 354.

For external sound signals (AUDIO) the impedance converter 351, 301/12 – 14 is available. Internal or external sound signals are applied via selectable pre-emphasis (50 µs / 75 µs, dependent on TV system) and multiplexer 302 to the FM-modulator, for system SECAM L to the AM-modulator. By means of solder links S51 and S52 the pre-emphasis can be switched off separately. Solder links must not be open.

The sound carrier is generated by a voltage controlled oscillator (VCO) switched on by transistor 357. The carrier frequency depends on the selected TV system (4.5, 5.5, 6.0 or 6.5 MHz) controlled in a Phase Locked Loop (PLL). The sound carrier amplitude is altered for TV systems PAL/NTSC M and N by transistor 356.

In the loop the carrier signal fsc is fed via amplifier 360, converter 312 to the programmable divider (pos. 306 – 308) to divide-down to the line frequency, see table below. This signal is compared by the PLL-circuit IC305 with the line frequency fH which serves as reference, generated by the sync pulse generator SAA1043 (U11). IC305 generates a control voltage which is applied via a low-pass filter, adder 304 to varicap 408 to tune the VCO. After switching on the sound carrier it lasts some seconds until the frequency has settled.
For FM modulation the audio signal is fed additionally via adder stage 304 to varicaps 408. For SECAM L sound modulation is switched over to AM. In this case the audio signal is applied via path AM, amplifier 363, to the AM modulator 361.

IC309 pin no.	TV system PAL					NTSC		SECAM			function
	G	D	I	M	N	NTSC	NTSC 4.43	B, G, H	D, K	L	
4	H	H	H	H	H	H	H	H	H	H	Carr. ON
5	L	L	H	L	L	L	L	L	L	L	
6	H	L	L	L	L	L	L	H	L	L	
7	L	L	L	L	H	L	L	L	L	L	
11	H	H	H	H	H	H	H	H	H	H	INT/$\overline{\text{EXT}}$
12	H	H	H	H	H	H	H	H	H	H	INT ON/OFF
13	L	L	L	L	L	L	L	L	L	H	AM/$\overline{\text{FM}}$
14	L	L	L	H	L	H	H	L	L	L	
IC310 pin no.											
4	H	H	L	H	H	H	H	H	H	H	Divider
10	L	H	L	H	H	H	H	L	H	H	Divider
IC311 pin no.											
3	L	L	L	H	H	H	H	L	L	L	
10	H	L	H	L	H	L	L	H	L	L	Divider
11	L	L	L	H	H	H	H	L	L	H	Pre-emphasis

Table logic states shift register IC309, sound logic IC310, 311

TV system	freq.	IC307 (305*) pin	3	4	5	n	IC308 (304*) p. 3	IC306 (303*) n1	total N
G, B, H	5.5 MHz		H	L	H	11	L	32	352
D, K, L	6.5 MHz		H	H	L	13	L	32	416
I	6.0 MHz		L	L	H	12	L	32	384
M	4.5 MHz		H	H	L	13	H	22	286
N	4.5 MHz		H	H	H	9	L	32	288
NTSC	4.5 MHz		H	H	L	13	H	22	286
NTSC 4.43	4.5 MHz		H	H	L	13	H	22	286

* pos. on unit 8, sound carrier 1

Table logic states and division ratios for the PLL

4.11. RF unit (U10)

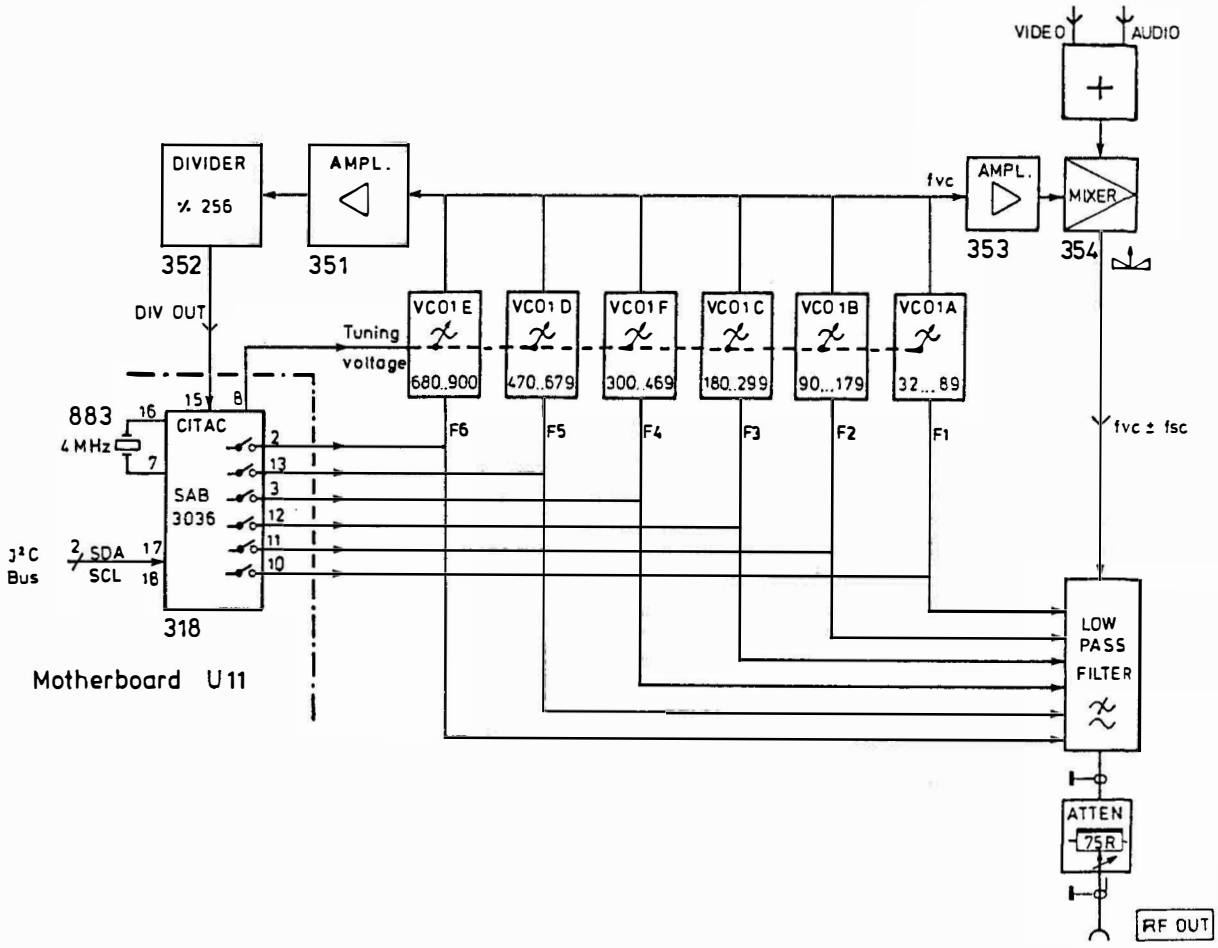

Block diagram: RF unit 10 (32 – 900 MHz)

The RF unit serves for generating a double-sideband modulated TV signal in the frequency range 32 MHz to 900 MHz. The unit consists of six oscillators, two amplifiers, modulator part, divider and low-pass filter which are built into different screened sections in the RF box. Supply voltages, control and modulation signals are applied from the motherboard (unit 11).

Generation of the vision carrier frequency is achieved by six different oscillators VCO1A to VCO1F, 5 colpitts circuits up to 680 MHz and a Clapp oscillator for the upper frequency range 680 – 900 MHz. These oscillators are switched on and tuned by the CITAC SAA3036 (Computer Interface for Tuning and Analog Control) via lines F1 to F6 resp. AFC from the motherboard. The CITAC is controlled by the microprocessor via the IIC bus. The frequency ranges of the oscillators, tuning voltages and switching signals F1 to F6 are shown in the following table. Signals F1 to F6 are additionally used for switching the corresponding path of the low-pass filter.

oscillator	frequency range (MHz)	tuning voltage range (Vdc)	switching state CITAC output	IC318 (U11) pin no.
VCO1A	32 – 89.75	⩾3 . . . ⩽ 27	H *	10
VCO1B	90 – 179.75	⩾1.5 . . . ⩽ 27	H	11
VCO1C	180 – 299.75	⩾3 . . . ⩽ 27	H	12
VCO1F	300 – 469.75	⩾3 . . . ⩽ 27	L	3
VCO1D	470 – 679.75	⩾3 . . . ⩽ 27	H	13
VCO1E	680 – 900.75	⩾3 . . . ⩽ 27	L	2

* H ≙ 12 V
L ≙ 0 V

The oscillator voltage of VCO1B – VCO1F is coupled into the stripline by resistors 627 to 630 resp. R675 which are soldered to the inductance of the LC-circuit. By changing the position of the output coupling point the RF amplitude may be altered and serves for adjustment of the residual carrier (see table adjustments, seq. 9.24 – 9.28); but adjustment should be done only if measured values exceeds tolerances because of replaced components in the RF unit, e. g. mixer or VCO1.

The RF signal is amplified by OM360 and fed into a 7 dBm double balanced mixer which is used as AM modulator. The video and sound signals are added at its modulating input 3/4. The video signal is dc-coupled (0.14 V . . . 1.54 V) while the sound signal is ac-coupled. From the output of mixer 354 the double-sideband modulated RF carrier (A3F) is fed to the activated low-pass filter path and the RF attenuator (75 Ω) to the RF output.

The low-pass filter operates in the lowest frequency range 32 – 89.75 MHz as a tracking filter. The tuning voltage (AFC) is applied from the CITAC to varicaps 463, 464 (pos. 401, 402 on U13) to tune the filter path. For frequencies > 470 MHz the low-pass filter is by-passed via diodes 451, 452 resp. 411, 412. The filter needs no adjustment.

Additionally the generated RF carrier signal of VCO1A – VCO1F is used for the frequency control loop. The RF signal is applied from the stripline output to amplifier OM350. After dividing down by 256 the signal is fed via DIV OUT to the CITAC. The CITAC compares this frequency with an internal generated reference (4 MHz clock) to supply the tuning voltage (AFC) for the VCO1 in order to lock the RF carrier frequency to the set value.

4.12. Keyboard and display unit (U12)

Unit 12 contains a 4-digit LED display, 21 to 29 pushbutton keys with the assigned LEDs next the keys (depending on version) and its concerning decoder/driver circuits. Data transfer from the CPU is performed via the C-bus lines SCL, SDA and 2 control lines. Input data sensed from the keyboard matrix are sent as serial information from the control transmitter IC301 via line KEYDAT to the CPU.

The display data including display and LED information are sent from the CPU via the C-bus to the display 451 and the LED display driver 302 by three signals: data (SDA), clock (SCL) and data enable. Both display drivers have identical functions. The data format consists of a start bit followed by 34 data bits. During the data transfer from the CPU the enable lines $\overline{\text{DISEN}}$ and $\overline{\text{LEDEN}}$ are set and the data block is loaded to the shift register. These data are latched after the 35th bit is completed, thus providing non-multiplexed direct drive to the display/LEDs. A reset signal is generated internally which clears the shift register for the next set of data.

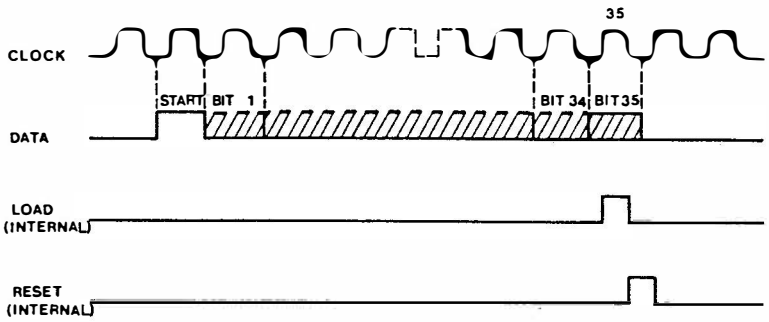

Input data format display/LEDs

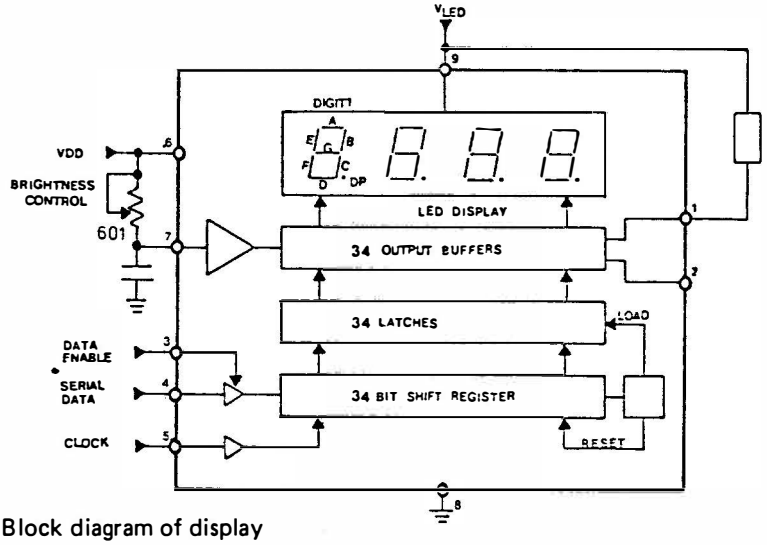

Block diagram of display

The brightness of the display is adjusted by means of potmeter R601 and for the LEDs by potmeter R602 in the 'diagnostic program' (see table adjustments 8.4. sequence 1.9. resp. 1.10.).

Input from the keyboard is achieved by means of the keyboard control transmitter IC301, SAA3007, which controls the key matrix inputs and sends the keycode in serial data from the output pin 1 via line KEYDAT to the CPU. The input matrix consists of 6 driver outputs (IC301 pin 13 – 18) and 6 sense inputs (pin 3 – 8). When a key is pressed the corresponding sense line is set to 'low' and IC301 transmits a burst of 12 pulses including latched address and command codes. Data are available as long as a key is pressed.

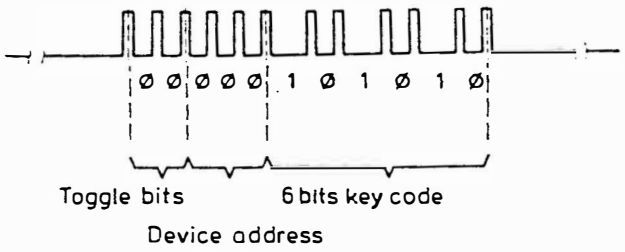

Data format 'KEYDAT'

For simple fault finding of the involved components of the keyboard and display please follow the 'diagnostic program', chapter 7.2., sequence 2 to 5.

5. ACCESS TO PARTS

5.1. TOP AND BOTTOM COVERS

- Unplug the mains connector.
- Loosen the top cover retaining screws at the rear.
- Lift up the rear edge of the top cover, then pull it backwards.
- The procedure to remove the buttom cover is the same as the above procedure, except the instrument must be turned upside down, and the 2 cross-slotted screws are loosened.

5.2. FUSE, MAINS TRANSFORMER

For mains voltage setting and fuses and the assigned safety instructions see chapter 2.

5.3. CARRYING HANDLE

- Lift the carrying handle.
- Prise off both plastic profile strips next to the carrying handle.
- Loosen the two cross-slotted screws of the holder for handle.

The handle consists of a rubber part and a steel insert.

5.4. KNOBS

- Remove the cap from the knob.
- Unscrew the nut and remove the knob.
- When replacing the knob, ensure that the white mark is correctly aligned with the text plate markings.

5.5. PUSHBUTTONS

- Remove the top cover (see 5.1.)
- Remove six screws holding the keyboard/display unit (U 12) from inside.

5.6. UNITS 1 TO 9

- Remove the top cover (see 5.1).
- Remove the fixing strap for units.
- Lift both guide arms of the required unit.
- Pull out the unit; use extraction tool of the service kit.
  Two extension boards are available to have good access to all components of the units.
  Attention: Please note the plug-in position of removed units.

5.7. TEXT PLATE, FRONT–PANEL EDGING

- Remove the top and bottom covers (see 5.1.).
- Remove two fixing screws (A) and lift off the side pieces (8) at both sides.
- Remove the black/brown ornamental strip (C) with a small screw driver.
- Loosen/remove four fixing screws (D) of the upper and lower front-panel edging.
- Remove the three knobs at the front panel (see 5.4.).
- Remove the text plate.
- Lift off the edging (E).

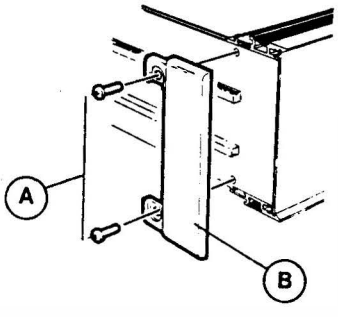

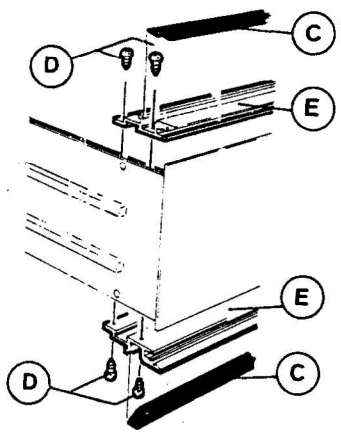

6. PERFORMANCE CHECK

6.1. GENERAL INFORMATION

WARNING:
Before switching on, ensure that the instrument has been installed in accordance with the instructions outlined in Section 2 of the Operating Manual: Installation instructions.

This procedure is intended to:
- check the instrument's specification
- be used for incoming inspection to determine the acceptability of newly-purchased instruments and/or recently-recalibrated instruments.
- check the necessity of recalibration after the recommended recalibration interval of 1 year.

ATTENTION:
The procedure does not check every detail of the instrument's calibration; rather, it is concerned primarily with those parts of the instrument which are essential to measurement accuracy and correct operation. Removing the instrument covers is not necessary to perform this procedure. All checks are made from the front panel.

If this test is started within a short period after switching on, bear in mind that steps may be out of specification, due to insufficient warming-up time. To avoid this situation, allow the specified warming-up time of 30 min.

6.2. GENERAL FUNCTIONAL TEST

Immediately after power being switched on a selftest routine is performed under which ROM and RAM are tested. A possible fault is detected and an error message on the display locates the fault as follows:

Err 1	ROM, checksum error
Err 2	RAM, write/read error
Err 3 ... Err 5	indications refer to faults for which details are written in chapter 7.1., 'Self-test program, error messages'

After this all segments and decimal points of the display and all LEDs are switched on for about 3 seconds for testing. When the selftest routine is terminated, the instrument is automatically set to that operating mode to which it was set before POWER OFF (frequency, test pattern, modulation).
- Check for correct TV system (thumbwheel swith at the rear)
- Within the front panel part SOUND select the CARRIER and MODULATION INTERN keys
- Within the front panel part PATTERN select the COLOUR BAR pattern
- Check the basic resp. stop position of the potmeters
  VIDEO AMPL 1 V
  CHROMA AMPL 100 %
- Set RF AMPL attenuator to 10 mV
- Select a vision carrier frequency, which is applied in the respective TV system, e.g. system G in VHF channel E5: 175.250 MHz

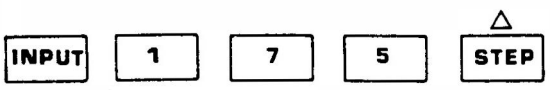

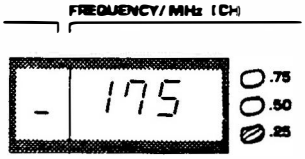

- Connect output RF OUT of the generator with the antenna of a TV receiver
- Check for correct video and sound reproduction at TV receiver; please select additional test patterns.

7. SELF–TEST PROGRAM, DIAGNOSTIC PROGRAM

7.1. SELF–TEST PROGRAM, ERROR MESSAGES

Immediately after power being switched on and during further operation the internal working program checks the main functions of the instrument. If a malfunction is detected an error message will be shown on the display (Err 1 ... 5) and may be used for its localization. During some error messages a partial operating is possible (see table).

error code	localization of malfunction	remarks
Err 1	ROM, checksum error	
Err 2	RAM, write/read error	
Err 3	patterns	short indication
Err 4	vision carrier frequency	short indication; instrument retunes the previous frequency setting; otherwise followed by '–Er 4'
– Er 4	vision carrier frequency setting impossible	operating video is possible
Err 5	internal data bus	

7.2. DIAGNOSTIC PROGRAM

For simple fault finding in the digital circuitries of PM 5515, PM 5516 and PM 5518 several test programs can be realized by means of the diagnostic program.

Moreover faults may be detected by other or conventional methods.

Generally the voltages of the power supply should be checked at first (see chapter 8.4 table of checks and adjustments.

The diagnostic program is activated by closing the solder bridge ST1 (motherboard U11 near the PROM IC 313).

After switching on the instrument all segments and decimal points of the display and all LEDs are switched on for about 3 seconds followed by indication 'tP–'.
The keys for sound and frequency keep their function except the DUAL key (available only PM 5515 GX, PM 5515 GTX and PM 5518 GTX). During the test mode it is possible to measure the single sound carriers.

MONO	sound carrier 1
DUAL	sound carrier 2
STEREO	sound carriers 1 and 2

Correct 'tP–' display (initial mode) allows the following test programs to be selected:

0. RAM test 1

Key in: 0; display: '0'

This test checks the RAM P8155, IC314, on main print.
The test duration is ca. 9 seconds. If no failure is detected the display returns to the initial indication 'tP–'; otherwise the display indicates 'FAIL'.

1. RAM test 2

Key in: 1; display: '1'

This test checks the CMOS–RAM PCD8571 (data memory), IC315 on main print. The test lasts about 1 second. It is not allowed to switch off the instrument during this test.
Indication see RAM test 1.

2. Display test

Key in: 2; display: '8.8.8.8.'

All 7-segment digits and decimal points of the display are lightened. By pushing any key except the INPUT key they are switched off and on.
Pushing the INPUT key ends this test:
single segments including decimal points pass from the left to the right side of the display. Afterwards the initial display 'tP–' appears.

3. LED test

Key in: 3; display: '3'

All LEDs on the textplate are lightened. By pushing any key except INPUT the LEDs are switched off and on. Pushing the INPUT key ends the test.
The single LEDs are switched on and off in turn. Afterwards the test program returns to 'tP–'.

4. Keyboard test 1

Key in: 4; display: '4'

Each key switches on the assigned LED next to the key. The test ends if a key is pushed 3 times.

5. Keyboard test 2

Key in: 5; display: '5'

The codes of pushed keys are decimally displayed; for code see below.
The test ends if a key is pushed 3 times. The test program returns to the initial display.

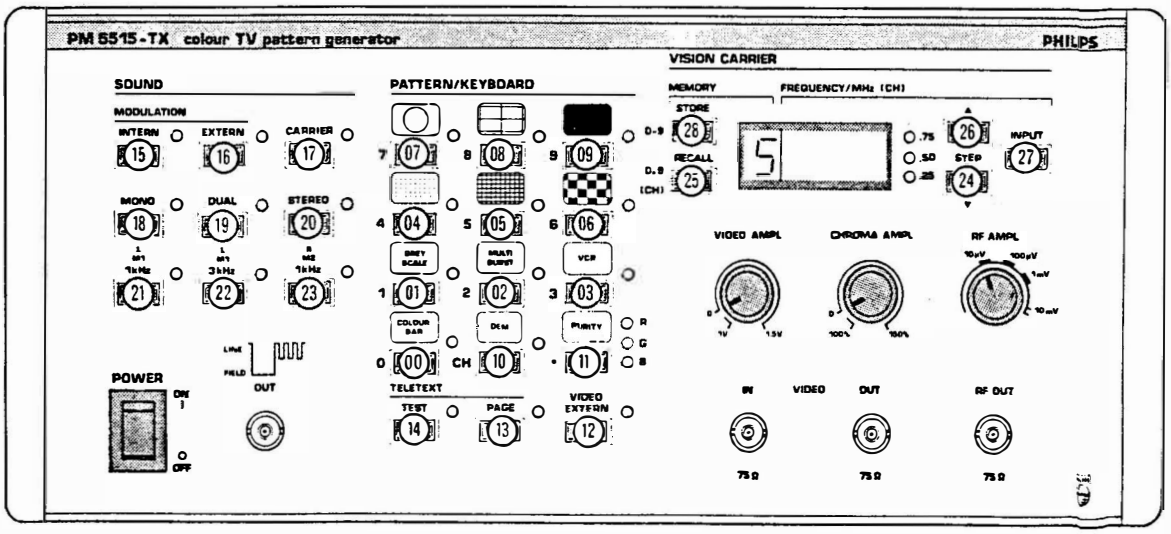

6. TV system test

By this test mode an indication of instrument version and selected TV system dependent on thumbwheel switch settings at the rear is possible. The numeric characters are available as continuous information on the serial data bus.
Meaning of the display values from left to right side:

Position	details/indication	remarks
1	indication of test 6	always '6'
2	Videotext and Stereo modes: 0 Mono 2 Stereo 4 Mono 6 Stereo	 no Antiope no Antiope Antiope Antiope
3	thumbwheel switch SECAM indication always 0 indication 1 ... 3	not available PM 5515 only PM 5516, PM 5518
4	thumbwheel switch PAL indication 0 ... 7	dependent on setting (not available PM 5516)

7. Port test

Key in: 7; display: '7'

All ports B and C of P8155, IC314 on main print, are set to high level. Pushing any key except the INPUT key effets alternating low and high level at all ports. The INPUT key ends this test. This test may change settings of frequency, sound and patterns. For this reason the instrument should be switched off and on again for processor reset.

8. Program version

Key in: 8; display: 'C ..' (short indication)

For instruments onwards program version C 1.2 (not version 2.0) the display shows for a short time the built-in program version (IC313 on U11).

9. Type of instrument

Key in: 9; display: type of instrument.

After pushing the numeric key 9 the display shows for a short time the type of instrument; e. g. for PM 5515: '5515'.

8. CHECKING AND ADJUSTING

8.1. GENERAL INFORMATION

The following information provides the complete checking and adjusting procedure for the instrument. As various control functions are interdependent, a certain order of adjustment is often necessary. The procedure is, therefore, presented in a sequence which is best suited to this order, cross-reference being made to any circuit which may affect a particular adjustment.
Before any check, the instrument must attain its normal operating temperature.

- Warming-up time under average conditions is 30 minutes.
- Adjustments should be made after 30 minutes
- Ambient temperature 23°C ±1 K
- Mains voltage, nominal values -12 %/+10 %
- The screening cover of the units must be closed and should be removed only for a short time for adjustment.
- Where possible, instrument performance should be checked before an adjustment is made.
- All limits and tolerances given in this chapter are calibration guides, and should not be interpreted as instrument specifications unless they are also published in chapter 1.2. of the Operating Manual.
- Tolerances given are for the instrument under test and do not include test equipment error.
- If not explicitely stated otherwise, the voltage potentials refer to the relevant contact measured against measuring earth (⏚).

8.2. RECOMMENDED TEST EQUIPMENT

The following abbreviations are used for settings and for the test equipments:

T	≙ keep setting concerned
—	≙ parameter not used
•—	≙ output, terminated with 75 Ω, e.g. Suhner > 1 GHz 0.5 W
Vdc, Vac	≙ Digital multimeter for a.c. and d.c. measurement, e.g. PM 2535
OSC	≙ Oscilloscope 50 MHz, e.g. PM 3055, line selector PM 8917
C/T	≙ Counter/Timer e.g. PM 6665
SPA	≙ Spectrum analyzer 1 GHz e.g. TEK 2710/01
FAM	≙ Modulation analyzer e.g. R&S FAM/B2/B8
TV	≙ TV receiver: Multi-system TV incl. stereo, Teletext, RGB/Y–C
Vector	≙ Vectorscope PAL/NTSC e.g. PM 5667, Vectorscope SECAM e.g. TTV8300 (CSF)
Notch filter	≙ 3 MHz-notch filter, adjustment seq. 3.2. (circuit diagram see fig. 57)
VPS	≙ VPS (Video Program System) monitor, e.g. R&S

For repair procedure a service kit is available comprising 2 extension test boards and extraction tools (see fig. 58). The kit can be ordered directly from Supply Centre Hamburg with service code number 5312 310 18027.

8.3. SOUND MODULATION (FM)

8.3.1. Measurements with Spectrum Analyzer

Sound carriers and modulation can be checked directly at the RF OUTPUT. Accuracy of FM measurements with spectrum analyzer are dependent on available type (e.g. frequency span, IF bandwidth 1 ... 3 kHz). Indicated values for Δf_{max} are dependent on the modulation frequency and selected pre-emphasis of the pattern generator. Δf_{max} is the frequency spacing of both spectral lines with maximum amplitude above and below the carrier frequency.

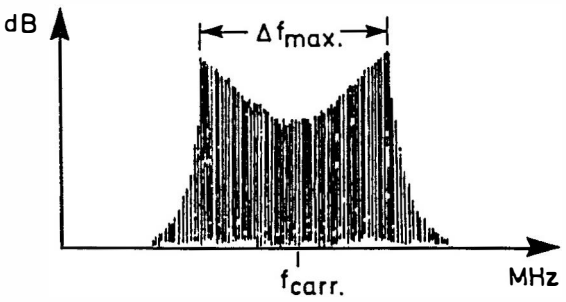

TV system	pre-emphasis	SOUND INT 1 kHz	specification	spectrum analyser value Δf_{max}
PAL B,G,H	50 µs	x	30 ±2 kHz	60
SECAM B,G,H	50 µs	x	30 ±2 kHz	60
PAL I	50 µs	x	27.5 ±2.5 kHz	55
PAL D	50 µs	x	24 ±4 kHz	46
SECAM D,K,K1	50 µs	x	24 ±4 kHz	46
PAL M,N	75 µs	x	15 ±5 kHz	30
NTSC M	75 µs	x	15 ±5 kHz	30
Stereo	50 µs	x	30 ±2 kHz	60
Stereo L	50 µs	x	15 ±1 kHz	30

8.3.2. Measurements with Modulation Analyzer (FAM)

Accurate deviation can be measured at the output of the sound module (U9) in mono sound versions and at pin 5 of unit 8 in stereo sound versions.

Instrument settings FAM:

De-emphasis:	50 µs for PAL/SECAM B,D,G,H,I,K,K1
	75 µs for PAL/NTSC M,N
Filter:	10 Hz ... 20 kHz

The 2nd sound carrier in stereo sound versions can be measured by selecting the diagnostic program 'TEST': push key 'DUAL'.

8.4. TABLE OF CHECKS AND ADJUSTMENTS

Seq.	SETTINGS: TV system	PATTERN	SOUND	FREQUENCY (MHz)	VIDEO AMPL	CHROMA AMPL	RF AMPL	MEASURING: measuring point/unit	measuring instrument	measured value	fig.	adjustment pos.no.	adjust	check	explanation
1.1	PAL G							TP1, U11 (S123, pin 46)	Vdc	5 V ±10 mV		R612, U11	x		power supply; hum < 2 mVpp
1.2								TP2, U11 (S123, pin 45)	Vdc	12 V ±20 mV		R606, U11	x		; hum < 3 mVpp
1.3								TP3, U11 (S 123, pin 44)	Vdc	-12 V ±20 mV		R611, U11	x		; hum < 4 mVpp
1.4								TP4, U11 (cath. D404)	Vdc	58 V ±4 V				x	; hum < 4 Vpp
1.5								TP5, U11 (R 608)	Vdc	6.1 V ±0.25 V				x	CMOS supply
1.6								Scart pin 8	Vdc	12 V ±30 mV				x	function switching at Scart output (S 888)
1.7								TP6, U11 (pos. 885)	Vdc	≥ 2.9 V				x	supply voltage for RAM, switch POWER OFF
1.8								TP7, U11 (IC 315.8)	Vdc	> 2.5 V				x	RAM supply VDD, switch POWER OFF
															Display/keyboard unit 12 Only necessary after component replacement on unit. Close solder bridge 'ST1' on main print (see chapter 7.2. Diagnostic program).
1.9	DIAGNOSTIC PROGRAM			via R603/U12					Vdc	500 mV ±25 mV		R601/U12	x		display, all segments ON (select test prog. 2)
1.10.	DIAGNOSTIC PROGRAM			via R605/U12					Vdc	300 mV ±15 mV		R602/U12	x		LEDs, all LEDs ON (select test progr. 3)
1.11.	DIAGNOSTIC PROGRAM													x	keyboard test (select and follow test program 4 and 5)

Seq.	SETTINGS: TV system	PATTERN	SOUND	FREQUENCY (MHz)	VIDEO AMPL	CHROMA AMPL	RF AMPL	MEASURING: measuring point/unit	measuring instrument	measured value	fig.	adjustment pos.no.	adjust	check	explanation
2.1	PAL G							TP8, U11 (IC 324.11)	C/T	5.000 MHz ±5 Hz		C542, U11	x		master OSC, clock frequency (use high imped. probe 10:1)
2.2	↓							TP9A, U11 TP9B, U11	OSC, input A OSC, input B	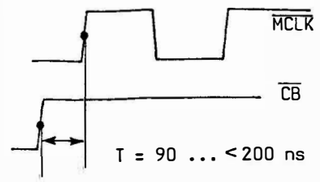					**Setting phase of the main clock MCLK** (Unit 1) (only necessary after replacement of sync. generator IC 324/U11 or complete unit 1). If T of phase MCLK to CB is less 90 ns inverter IC 307 must be modified (dependent on your instrument): a. inverter IC 307.1.2. in normal operation b. inverter IC 307.1.2. is by-passed (s. diagram U1) Instruments including VPS (see Fig. 109A): adjustment is achieved by setting the jumper to position INV resp. NINV on U1.
2.3	NTSC M							TP8, U11 (IC 324.11)	C/T	5.034964 MHz ±5 Hz		C541, U11	x		master OSC,clock frequency system M (use high imped. probe 10:1)
2.4	PAL G	GREY SCALE						SYNC OUT	OSC	5 V ±0.2 Vpp	1			x	field sync. pulse
2.5	PAL G	↓						SYNC OUT	↓	2.6 V ±0.3 Vpp	1			x	line sync. pulse
2.6	PAL G		CARR.OFF		1 V	0 %		TP10 (anode D443)		0 V ±40 mV		R664, U11	x		blanking level, dc value
2.7	PAL G	VIDEO EXT			1 V	0 %		TP10		0 V ±50 mV				x	apply ext. black/white video 1 Vpp to VIDEO IN
2.8	PAL G	VIDEO EXT						TP10		3 V ±0.1 Vpp				x	video amplitude
2.9	PAL G	GREY SCALE						VIDEO OUT		0 V ±140 mV				x	blanking level, dc value
2.10	PAL G							VIDEO OUT ●		1 V ±40 mVpp				x	video amplitude, PAL
2.11	NTSC M									1 V ±40 mVpp				x	NTSC M
2.12	NTSC M									0.28 V ±10 mVpp				x	sync amplitude, NTSC M
2.13	PAL G							↓	↓	0.3 V ±10 mVpp				x	PAL G
2.14	NTSC M							VIDEO OUT	OSC	*54 mV ±5 mV				x	black level lift, system M; *value > blanking level
2.15	PAL G							VIDEO OUT	OSC	blanking level				x	black level without lift
2.16	PAL G	↓	↓		↓	↓		TP11(50), U11	OSC	1.4 V ±40 mV		R696, U11	x		video signal applied to RF modulator U10

Seq.	SETTINGS: TV system	PATTERN	SOUND	FREQUENCY (MHz)	VIDEO AMPL	CHROMA AMPL	RF AMPL	MEASURING: measuring point/unit	measuring instrument	measured value	fig.	adjustment pos.no.	adjust	check	explanation
3.1	PAL G	MULTI BURST / GREY SCALE	CARR.OFF		1 V	0 %		VIDEO OUT	OSC ext.trigger	line sync.pulses		R786, U6	x		Multiburst unit 6, dc level adjust pairing of line sync pulses
3.2								VIDEO OUT	OSC *3MHz-notch filter	3 MHz ±15 kHz		R757, U6	x		frequency multiburst, adjust burst freq. 2.8 MHz/3.2MHz to same amplitude *circuit diagram see Fig. 57
3.3								VIDEO OUT	OSC ext.trigger	ampl.multiburst		R676,U11	x		amplitude of multiburst adjust to max. value of black and white level
3.4								VIDEO OUT		< 2 x 10 mVpp					amplitude response of multiburst
4.1	PAL G		CARR.OFF	182.25	1 V	0 %	1 mV	RF OUT (VIDEO OUT)	TV (monitor)			R136, U6	x		Circle U6; adjust left circle line to 5th vertical line from screen center
4.2												R114, U6	x		horiz. position; set symmetr. to center
4.3												R116, U6	x		vertic. position; set symmetr. to center
4.4												R129, U6	x		ellepticity
4.5												R136, U6	x		adjust circle to 4.5th vertical line from screen center
4.6	NTSC M											R120, U6	x		vertical position NTSC; set symmetr. to center
5.1	PAL G	DEM	CARR.OFF		1 V	100 %		TP12, U11 (S126 pin 34)	OSC	2V ±50mVpp		R662, U2	x		amplitude subcarrier (unit 2)
5.2	PAL G							TP12, U11 (SUBCAR.OUT)	C/T	4433619 ±44 Hz				x	subcarrier frequency; PAL G (locked to the master clock)
5.3	NTSC M									3579545 ±36 Hz				x	NTSC
5.4	PAL M									3575611 ±36 Hz				x	only for PM 5515 M
5.5	PAL N									3582056 ±36 Hz				x	only for PM 5515 N
5.6	PAL G	GREY SCALE / COLOUR BAR / MULTI BURST / DEM	CARR.OFF		1 V	100 %		VIDEO OUT	Vector PAL	90° ±1°	4	C509, U2	x		phase of PAL burst Ev to Eu, (U2)
5.7	PAL G								Vector PAL,OSC	within 3° (5 %)	2,4	R633, U2	x		relative amplitude Ev to Eu, (U2) set vectorscope ampl. R-Y component to correct tolerance field (red), adjust B-Y component by R633 (blue, yellow)
5.8	PAL G								Vector PAL	see fig.	4			x	vectors V, U (PAL); unit 2
5.9	NTSC M								Vector NTSC	see fig.	3,4			x	vectors V, U, I, Q (NTSC); unit 2
5.10	PAL G	GREY SCALE / COLOUR BAR / MULTI BURST / VCR							Vector PAL	see fig.	7			x	saturation steps (U2)
6.1	PAL G	PURITY RED	CARR OFF		1 V	150 %		VIDEO OUT	OSC ext.trigger	use chroma ampl. for reference A					chroma settings 150 %, 100 %
6.2	PAL G					100 %				adjust to 2/3xA		R156, U11	x		use reference value seq. 6.1
6.3	PAL G					0 %				chroma < 2 mVpp				x	chroma amplitude '0'
6.4	PAL G	GREY SCALE			1.5 V	0 %				video 1.5±0.1 Vpp				x	max. video amplitude
6.5	PAL G				0 V	0 %				video < 10 mVpp				x	min. video amplitude

Seq.	SETTINGS: TV system	PATTERN	SOUND	FREQUENCY (MHz)	VIDEO AMPL	CHROMA AMPL	RF AMPL	MEASURING: measuring point/unit	measuring instrument	measured value	fig.	adjustment pos.no.	adjust	check	explanation
6.6	PAL G	COLOUR BAR	CARR.OFF		1 V*	100 %		VIDEO OUT	Vector, PAL, OSC	within 3° (5 %)	8	R153, U11	x		relation chroma/luminance; *set potm.VIDEO AMPL to 1 Vpp at VIDEO OUT
6.7	NTSC				1 V*	100 %			Vector, NTSC	within 3° (5 %)	8			x	NTSC M
6.8	PAL G	*			1 V	100 %			OSC	≤ 20 mVpp				x	residual subcarrier for PAL; *black pattern ≙ all patterns OFF
6.9	NTSC				1 V	100 %			OSC	≤ 20 mVpp				x	NTSC M
7.1	PAL G		CARR.OFF	182.25	1 V*	100 %	max.	RF OUT / VIDEO OUT	TV / OSC	luminance, blanking for circle				x	black/white patterns; *set VIDEO AMPL to 1 Vpp at VIDEO OUT
7.2	PAL G									pulse 200 ±10ns	10,12			x	check center indication, 2T-filter
										see fig.	13			x	pattern without interlacing
7.3	NTSC									see fig.	11,12			x	PAL M, NTSC
7.4	PAL G									see fig.	14			x	checkerboard (check add. NTSC)
7.5	PAL G	GREY SCALE								see fig.	15			x	greyscale (check add. NTSC)
7.6	PAL G	MULTI BURST								see fig.	16			x	multiburst (check add. NTSC)
7.7	PAL G,I	GREY SCALE / COLOUR BAR / MULTI BURST / VCR	CARR.OFF	182.25	1 V*	100 %	max.	RF OUT / VIDEO OUT	TV, OSC / Vector, PAL	see fig.	5,7			x	colour patterns; *set VIDEO AMPL to 1 Vpp at VIDEO OUT
7.8	NTSC M								Vector, NTSC	see fig.	6,7			x	colour generating (U2) and analogue luminance signals, moving pattern
7.9	PAL G,I	GREY SCALE / COLOUR BAR / MULTI BURST / DEM							TV,OSC / Vector, PAL	see fig.	2,4			x	colour generating (U2), analogue signals
7.10	NTSC								Vector, NTSC	see fig.	3,4				NTSC
7.11	PAL G,I	DEM							TV,OSC / Vector, PAL	see fig.	17,19				chroma (G-Y) = 0 (left part 1st horizontal bar shows skin colour on TV screen)
7.12	NTSC								Vector, NTSC	see fig.	18,19				
8.1	PAL G	VIDEO EXT	CARR.OFF	RECALL 0*			max.	RF OUT	C/T	32.0 MHz ±15 kHz				x	vision carrier frequencies; RF oscillator: VCO 1a; *store freq. settings to memory by: STORE CH △STEP
8.2		*		RECALL 1						89.9 MHz ±15 kHz				x	VCO 1a
8.3				RECALL 2						90.0 MHz ±20 kHz				x	VCO 1b
8.4				RECALL 3						179.75MHz ±15 kHz				x	VCO 1b
8.5				RECALL 4						180.0 MHz ±15 kHz				x	VCO 1c
8.6				RECALL 5						299.75 MHz ±15 kHz				x	VCO 1c
8.7				RECALL 6						470.0 MHz ±25 kHz				x	VCO 1d
8.8				RECALL 7						679.75MHz ±30 kHz				x	VCO 1d
8.9				RECALL 8						680.0 MHz ±30 kHz				x	VCO 1e
8.10				RECALL 9						900.75MHz ±35 kHz				x	VCO 1e
				RECALL 5 +0.25 MHz						300.0 MHz ±20 kHz				x	VCO 1f
				RECALL 6 -0.25 MHz						469.75 MHz ±25 kHz				x	VCO 1f
8.11	PAL G	VIDEO EXT	CARR.OFF	32...300	1 V	100 %	max.	RF OUT	SPA	≤ -35 dBc				x	harmonics vision carrier (1st/2nd)
8.12	PAL G	GREY SCALE	CARR.OFF	182.25	1 V	100 %	max.	RF OUT	SPA	-20 dB ±0.5 dB (10 % ±1 %)		R717, U11	x		residual carrier (AM negative), RF amplitude > 80dBµV (10 mV at 75 Ohm); check equidistent steps of greyscale in linear demodulated video signal (resp. IF-signal)
8.13	PAL G		CARR.OFF	650/900					SPA	-20 dB ±6 dB				x	
8.14	PAL G	VIDEO EXT	CARR.OFF	182.25			10 mV		SPA, TV	80 dBµV (10 mV)		R753		x	mech.adjustment attenuator RF AMPL (R 753) to indication '10 mV'

Seq.	SETTINGS: TV system	PATTERN	SOUND	FREQUENCY (MHz)	VIDEO AMPL	CHROMA AMPL	RF AMPL	MEASURING: measuring point/unit	measuring instrument	measured value	fig.	adjustment pos.no.	adjust	check	explanation
9.1.	PAL G	VIDEO EXT	CARR.ON	182.25	-	-	max.	RF OUT	SPA, TV	13 dB		R 644, U9	x		ratio vision to sound carrier (mono sound versions)
9.2.	PAL D									11 dB ±1 dB				x	PAL D
9.3.	PAL I									12 dB ±1 dB				x	PAL I
9.4.	NTSC									13 dB ±1 dB				x	NTSC, PAL M/N
9.5.	PAL G	PURITY RED	MONO	470.	1 V	100 %	max.	RF OUT	SPA, TV	≤ -55 dBc				x	intermodulation products
9.6.				680/800						≤ -50 dBc				x	(vision carrier to fvc ±1.1 MHz)
9.7.				900						≤ -46 dBc					on screen no visible interference
9.8.	PAL G	VIDEO EXT	CARR.ON	-	-	-	-	unit 9, pin 5 (S130, pin 5)	C/T	5.5 MHz ±55 Hz				x	sound carrier frequencies (mono sound versions) sound carrier OSC (U9) is locked to master clock
9.9.	PAL D									6.5 MHz ±65 Hz				x	PAL D
9.10.	PAL I									6.0 MHz ±60 Hz				x	PAL I
9.11.	NTSC									4.5 MHz ±45 Hz				x	NTSC, PAL M/N
9.12.	PAL G	VIDEO EXT	CARR.ON INT.1kHz	182.25	1 V	100 %	max	RF OUT (unit 9, pin 5)	SPA,TV (FAM)	30 kHz ±2 kHz		R 629, U9	x		sound modulation FM, deviation (mono sound versions) measurement hints see chapt. 8.3.
9.13.	PAL D/K									24 kHz ±4 kHz				x	PAL D
9.14.	PAL I									27.5 kHz ±2.5 kHz				x	PAL I
9.15.	PAL M/N									15 kHz ±5 kHz				x	PAL M/N, NTSC
9.16.	PAL G							Scart pin 3	C/T Vac	1 kHz ±100 Hz 400 ±20 mVrms				x	sound signal intern 1 kHz
9.17.	PAL G	VIDEO EXT	CARR ON EXTERN	182.25	1 V	100 %	max.	RF OUT (unit 9, pin 5)	SPA, TV (FAM)	30 kHz ±2 kHz				x	sound extern; FM deviation apply ext. signal to AUDIO IN pin 3: 500 Hz, ∼ , 400 ±20 mVrms

RF modulator U10 (for experienced service workshops). The following table seq. 9.18....9.38. should be used in case of faults and component replacements on U10. For access to parts remove upper screening cover.

9.18.		—	—	32... 89				AFC, U10 (C587)	Vdc	3 V ...≤27 V		L801, U10	x		tuning voltage range, (AFC): VCO 1a
9.19.		—	—	90...179						1.5 V...≤27 V		L802, U10	x		adjust core L801/802 VCO 1b
9.20.		—	—	180...299						3 V ...≤27 V		L803*, U10	x		*adjust by bending approp.coil L803-810, VCO 1c
9.21.		—	—	470...679						3 V ...≤27 V		L804*, U10	x		VCO 1d
9.22.		—	—	680... 900						3 V ...≤27 V		L805*, U10	x		VCO 1e
9.23.		—	—	300...469						3 V ...≤27 V		L810*, U10	x		VCO 1f
9.24.	PAL G	GREY SCALE	CARR.INT	150	1 V	100 %	max.	RF OUT	SPA**	20 dB ±3 dB		R627*, U10	x		residual carrier (AM neg.)
9.25.			1 kHz OFF	200						20 dB ±3 dB		R628*, U10	x		*if neces. move position R627-630 or output
9.26.				600						20 dB ±6 dB		R629*, U10	x		coupling pt. (change soldering connection at
9.27.				750						20 dB ±6 dB		R630*, U10	x		corresponding coil). No visual compression allowed
9.28.				400						20 dB ±6 dB		R675*, U10	x		of linear demodulated video signal. Adjustment influences intermodulation products fvc±1.1 MHz, see seq. 9.32...9.37.

**SPA setting: bandwidth ∼1.5 MHz
scanwidth zero (dispers./div)

Seq.	SETTINGS: TV system	PATTERN	SOUND	FREQUENCY (MHz)	VIDEO AMPL	CHROMA AMPL	RF AMPL	MEASURING: measuring point/unit	measuring instrument	measured value	fig.	adjustment pos.no.	adjust	check	explanation
9.29.	SECAM L	GREY SCALE	CARR INT 1 kHz ON	300...900			max.* or <10mV	RF OUT	SPA**	spurious signal ≤ 12% of distance of neighbouring greyscale values		R 629, 630 R 675 (U10)	x		**SECAM L, 1 kHz spurious** modulated on video signal *depending on sensitivity of SPA don't overdrive the analyzer input **SPA setting: bandwidth 1.5 MHz scanwidth zero scale linear
9.30.	PAL G	VIDEO EXT	OFF	32...900			max.	RF OUT	SPA	≥ 80 dBµV (10 mV)				x	**RF output level** (at 75 Ohms)
9.31. 9.32. 9.33. 9.34. 9.35.	PAL G	RED	CARR INT 1 kHz OFF	90...179 180...299 300...469 470...679 680...900			max.	RF OUT	SPA**,TV	≤ -55 dBc ≤ -55 dBc ≤ -55 dBc ≤ -50 dBc ≤ -50 dBc		R627*, U10 R628*, U10 R675*, U10 R629*, U10 R630*, U10	x x x x x		**Intermodulation products** (vision carrier to fvc ± 1.1 MHz) *move soldering connection at corresponding oscillator coil to high side; add check of residual carrier (see seq. 9.24 - 9.28.) **SPA setting: bandwidth 120 kHz scanwidth 0.5 MHz
9.36. 9.37. 9.38.	PAL G	VIDEO EXT	OFF	32...299 300...469 470...900			max.	RF OUT	SPA	± 2 dBµV ± 3 dBµV ± 2 dBµV		R654, 655* R656*(U10)	x x x		**RF level flatness** *adjustment serves for final matching influencing the residual carrier, video compression and intermodulation products, see seq. 9.24 - 9.35.

Seq.	SETTINGS: TV system	PATTERN	SOUND	FREQUENCY (MHz)	VIDEO AMPL	CHROMA AMPL	RF AMPL	MEASURING: measuring point/unit	measuring instrument	measured value	fig.	adjustment pos.no.	adjust	check	explanation
															SECAM adjustments PM 5518, PM 5516 For general checks and adjustments PM 5516, see seq.1.1....9.17. except PAL/NTSC unit
10.1.	SECAM L	COLOUR BAR	CARR.OFF		1 V*	100 %		VIDEO OUT	Vecamscope**	adj. red vector to tolerance field 'R'	20	R626,U3	x		DR and DB-deviation * set VIDEO AMPL to 1 Vpp at VIDEO OUT ** setting: 'VE'
10.2	SECAM L		CARR.OFF					VIDEO OUT .	Vecamscope**	adjust blue to tolerance field 'B'	20	R611, U3	x		DB-deviation
10.3.	SECAM L		CARR.OFF					VIDEO OUT	Vecamscope** TTV 8300	5 divisions*	21	R143, U11	x		chroma amplitude * for different instruments use SECAM colour bar characteristics fig. 20 ** setting: Chroma 'CHR'
10.4.	SECAM L		CARR.OFF					VIDEO OUT	Vecamscope**	adjust amplitudes to same value	21	L757, U3	x		bell-shaped curve ** setting: Chroma DB-components
10.5.	SECAM L		CARR.OFF					IC313 p.15,U3	OSC,probe 10:1	level between 1.9...3.6V	22	L756, U3	x		DC-level at sampling times
10.6.	SECAM L	GREY SCALE	CARR.OFF	182.25	1 V	100 %	max.	RF OUT	SPA	-20 ±0.5 dBc		R710, U11	x		residual carrier (AM positive) RF amplitude: >10 mV ≙ 80 dBµV, no visual compression allowed of linear demodulated video signal
10.7.	SECAM L		CARR.ON	182.25	1 V	100 %	max.	RF OUT	SPA	11dB ±1dB				x	ratio vision to sound carrier
10.8.	SECAM L	—	ON 1kHz					unit 9, pin 5	OSC,TV	50% ±3 %				x	sound modulation AM
10.9.	SECAM L		CARR.OFF					VIDEO OUT RF OUT	OSC TV	see fig.	23			x	BW pattern; check centre indication and luminance blanking
10.10.	SECAM L	GREY SCALE, COLOUR BAR, MULTI BURST, VCR	CARR.OFF						TV,OSC Vecamscope	see fig.	24			x	colour patterns *check analog luminance and colour signal generation of unit 3
10.11.	SECAM L	GREY SCALE, COLOUR BAR, MULTI BURST, DEM	CARR.OFF							see fig.	25			x	

Seq.	SETTINGS: TV system	PATTERN	SOUND	FREQUENCY (MHz)	VIDEO AMPL	CHROMA AMPL	RF AMPL	MEASURING: measuring point/unit	measuring instrument	measured value	fig.	adjustment pos.no.	adjust	check	explanation
															Teletext PAL G,I (PM 5515-T, PM 5518-TX) Antiope SECAM L (PM 5516-T, PM 5518-TX) For checks TV with teletext decoder is necessary. Operating see O.M. chapter 3.5.5. * PM 5518-TX: The 'TEST' pattern is possible by removing SECAM unit (U3); select pushbuttons 'TELETEXT SECAM'
11.1.	PAL G	TELETEXT	OFF	182.25	1 V	0 %	max.	RF OUT	TV incl. teletext decoder					x	select different pages (PM 5515, PM 5518)
11.2.	SECAM L	PAGE							TV incl. antiope decoder					x	PM 5516, PM 5518
11.3.	PAL G	TEST*	OFF	182.25	1 V	0 %	-	IC 301 p.6, U4	C/T, probe	6937500 ±70 Hz				x	teletext data clock frequencies are locked to master clock
11.4.	SECAM L							IC 301 p.6, U4A	C/T, probe	6203125 ±62 Hz				x	antiope (PM 5516-T, PM 5518-TX)
11.5.	PAL G							VIDEO OUT	OSC,ext.trigger	9.27...10.67 µs	26			x	data timing (start line sync to clock run-in)
11.6.	SECAM L								OSC,ext.trigger	10.26...10.90 µs	27			x	antiope
11.7.	PAL G									460±20 mV	26	R 613, U4	x		amplitude teletext, binary '1' (values related to blanking level)
11.8.	SECAM L									700 + 0 mV -40 mV	27	R 613, U4	x		antiope
11.9..	PAL G									0 V ±10 mV	26			x	amplitude binary '0', teletext
11.10.	SECAM L									0 V ±15 mV	27			x	antiope
11.11	PAL G	TELET.PAGE + GREY SCALE	-	-	1 V	0 %	-	VIDEO OUT	OSC,ext.trigger	check 1. field check 2. field				x	line selection: line 22 line 335

Seq.	SETTINGS TV system	SETTINGS PATTERN	MEASURING measuring point/unit	MEASURING measuring instrument	MEASURING measured value	MEASURING fig.	MEASURING adjustment pos. no.	adjust	check	explanation
			rear side							**Y/C & RGB unit (U5A)** If possible, use additional RGB-monitor
12.1.	PAL/SECAM	GREY SCALE / COLOUR BAR / MULTI BURST / DEM	OUTP. RED ●	OSC	adjust ampl. to black/white level	31	R686, U5	x		I amplitude multiburst pattern I ampl.response ≤10 mV
12.2.					0.7 V ±150 mV	31			x	DC-offset (Vdco)
12.3.					0.7 V ±20 mVpp	31			x	signal amplitude
12.4.	PAL/SECAM				see fig.	31			x	luminance PAL Y = 0.5; SECAM Y = 0.75
12.5.					see fig.	31,34			x	I check patterns (contents) I greyscale: equidistent steps; colour bar
12.6.			SYNC	OSC	-2.0 V ±0.2 V	43			x	sync. pulse
12.7.	PAL/NTSC		SUBCARRIER	OSC	1 V ±80 mVpp				x	ampl. subcarrier PAL/NTSC
12.8.	PAL G, I		SUBCARRIER	C/T	4433619± 44 Hz				x	I subcarrier frequencies (not PM 5516)
12.9.	PAL/NTSC		SUBCARRIER	C/T	see seq.5.3...5.5				x	I for different systems see seq. 5.3... 5.5.
12.10.	PAL/SECAM		OUTP. RED ●	OSC	0.7 V ±20 mVpp	44			x	digital white
12.11.	PAL I	COLOUR BAR	OUTP. RED ●	OSC	see fig.	46			x	colour bar pattern, PAL I
12.12.	PAL/SECAM	GREY SCALE / COLOUR BAR / MULTI BURST / DEM	OUTP. GREEN ●	OSC	ampl. at black/white level				x	I amplitude multiburst pattern I ampl. response ≤10 mV
12.13.					0.7 V ±150 mV	32			x	DC level (Vdco)
12.14.					0.7 V±20 mVpp	32			x	signal amplitude
12.15.					see fig.	32			x	luminance PAL Y = 0.5, SECAM Y = 0.75
12.16.					see fig.	32,35			x	I check patterns (contents) I greyscale: equidistent steps; colour bar
12.17.	PAL/SECAM	COLOUR BAR			0.7 V ±20 mVpp	44			x	digital white
12.18.	PAL I				see fig.	47			x	colour bar pattern, PAL I
12.19.	PAL/SECAM	GREY SCALE / COLOUR BAR / MULTI BURST / DEM	OUTP. BLUE ●	OSC	ampl.at black/white level	33			x	I amplitude multiburst pattern I ampl. response ≤10 mV
12.20.					0.7 V ±150 mV	33			x	DC-offset (Vdco)
12.21.					0.7 V ±20 mVpp	33			x	signal amplitude
12.22.					see fig.	33			x	luminance PAL Y = 0.5, SECAM Y = 0.75
12.23.					see fig.	33,36			x	I check patterns (contents) I greyscale: equidistent steps; colour bar
12.24.	PAL/SECAM	COLOUR BAR			0.7 V ±20 mVpp	44			x	digital white
12.25.	PAL I				see fig.	48			x	colour bar pattern, PAL I
12.26.	NTSC		OUTP. RED ●	OSC	V_{lift}=54 ±5 mV	45			x	I black level lift (NTSC,PAL M)
12.27.			OUTP. GREEN ●		V_{lift}=54 ±5 mV	45			x	I (not PM 5516)
12.28.			OUTP. BLUE ●		V_{lift}=54 ±5 mV	45			x	I

Seq.	SETTINGS TV system	SETTINGS PATTERN	VIDEO AMPL	CHROMA AMPL	MEASURING measuring point/unit	MEASURING measuring instrument	MEASURING measured value	fig.	adjustment pos. no.,	adjust	check	explanation
												Y/C & RGB unit (U5A)
12.30	PAL/SECAM	COLOUR BAR	–	–	OUTP. GREEN ●—	OSC	Vsync = 0.3 V ± 0.01 V	49			x	sync in RGB signal GREEN set jumper X002 to ON (on unit 5A)
12.31	NTSC, M	↓	–	–	OUTP. GREEN ●—	↓	Vsync = 0.28 V ± 0.01 V	50			x	
												Y-signal (luminance) for luminance test with 75 Ω termination connect an RGB output cable to socket X822 to get to BNC connector
12.32	PAL G, I	GREY SCALE / COLOUR BAR / MULTI BURST / DEM	–	100 %	OUTP. Y/C * ●—		1 V ± 40 mV (pp)	51			x	luminance, total amplitude
12.33	NTSC, M	↓	–	↓	↓	↓	1 V ± 40 mV (pp)	53			x	
12.34	SECAM L	↓	–	↓	↓	↓	1 V ± 40 mV (pp)	55			x	
12.35	SECAM L	↓	–	↓	↓	↓	0.7 V ±150 mV	55			x	blanking level, DC position
12.36	PAL G, I	↓	–	↓	↓	↓	0.7 V ±150 mV	51			x	
12.37	NTSC, M	↓	–	↓	↓	↓	0.7 V ±150 mV	53			x	
												Chroma signal, amplitude * for chroma test with 75 Ω termination connect an RGB output cable to socket X821 to get C-signal to BNC connector
12.38	PAL G, I	GREY SCALE / COLOUR BAR / MULTI BURST / DEM	–	100 %	OUTP. Y/C * ●—	OSC	300 mV ±15 mV (pp)	52			x	amplitude of burst
12.39	NTSC, M	↓	–	↓	↓	↓	285 mV ±15 mV (pp)	54			x	amplitude of burst
12.40	SECAM L	CYAN	–	↓	↓	↓	460 mV ±40 mV (pp)	56			x	chroma amplitude purity CYAN

●— ≙ 75 Ω termination

OSC ≙ oscilloscope

Seq.	SETTINGS: TV system	PATTERN	SOUND: CARR	SOUND: mode	SOUND: INT	SOUND: EXT	FREQUENCY (MHz)	VIDEO AMPL	CHROMA AMPL	RF AMPL	MEASURING: measuring point/unit	measuring instrument	measured value	fig.	adjustment pos.	adjust	check	explanation
																		stereo sound versions (U7/U8), analog for rough check or function test use TV incl. Stereo/Dual decoder
13.1.	PAL G	VIDEO EXT	ON	MONO	OFF	OFF	182.25	–	–	max.	RF OUTPUT	SPA	13 dB		R614, U8	x		Ratio vision to sound carrier 1
13.2	PAL D...M	↓	↓	↓	↓	↓	↓			↓	↓	SPA	see seq. 9.2...				x	for PAL D...M, NTSC
13.3	PAL G	VIDEO EXT	ON	STEREO	OFF	OFF	182.25	–	–	max.	RF OUTPUT	SPA	20 dB		R638, U8	x		ratio vision to sound carrier 2
13.4.	PAL D...M			STEREO							↓	SPA	-				x	sound carrier 2, not present
13.5.	PAL G			MONO							unit 8, pin 5 (S130, pin 5)	C/T	5.5MHz ±55 Hz					frequency sound carrier 1 sound carrier OSC is locked to master clock
13.6.	PAL D...M	↓	↓	↓	↓	↓	↓			↓	↓	C/T	see seq. 9.9...				x	PAL D...M, NTSC
13.7.	PAL G	VIDEO EXT	ON	DUAL *	OFF	OFF	182.25	–	–	–	unit 8, pin 5 (S130, pin 5)	C/T	5.742188 MHz ±57 Hz				x	frequency sound carrier 2 *select diagnostic program, close solder joint 'TEST'(on unit 11).
13.8.	PAL G	VIDEO EXT	ON	MONO	1kHz L	OFF	182.25	–	–	max.	RF OUTPUT (unit 8, pin 5)	SPA,TV (FAM)	±30 kHz ±2 kHz		R602, U8	x		sound modulation carr. 1 (FM) measurem. hints see chapt. 8.3.
13.9.	PAL D...M	↓	ON	MONO	1kHz L	↓	↓			↓	↓	↓	see seq.9.13...				x	PAL D...M, NTSC
13.10	PAL G	↓	ON	DUAL	1kHz L/R	↓	↓			↓	↓	↓	±30 kHz ±2 kHz				x	FM, deviation DUAL, carr. 1 and 2
13.11	↓	↓	↓	STEREO	1kHz R	↓	↓			↓	↓	↓	±30 kHz ±2 kHz*		R654, U8	x		FM, deviation carrier 2 *adjust to min. cross talking L to R channel
13.12	↓	↓	↓	STEREO	1kHz L	↓	↓			↓	↓	↓	±15 kHz ±1 kHz				x	deviation carr.1; channel R=OFF
13.13	PAL G	VIDEO EXT	ON	STEREO	OFF	OFF	182.25	–	–	max.	RF OUTPUT	SPA (FAM), TV	±2.5 kHz±500 Hz				x	deviation carr.2 by pilot carrier
13.14	↓	↓	↓	MONO	1kHz L	↓	↓			↓	Scart, pin 3	C/T, Vac	1 kHz ±100 Hz				x	sound intern 1 kHz/3 kHz
13.15	↓	↓	↓	MONO	3kHz L	↓	↓			↓	Scart, pin 3	C/T, Vac	3 kHz ±300 Hz				x	amplitude 400 mV ±20 mVrms
13.16	↓	↓	↓	STEREO	OFF	ON	↓	–	–	↓	RF OUTPUT	SPA (FAM), TV	±30 kHz ±2 kHz				x	sound extern; FM deviation apply signal to AUDIO IN pin 3: ~, 500 Hz, 400 ±20 mVrms to pin 5:~, 2 kHz, 400 ±20 Vrms
13.17	PAL G	VIDEO EXT	ON	MONO	OFF	OFF	–	–	–		unit 7, pin 20	C/T	54687.5 ±0.5 Hz				x	pilot frequency
13.18	↓	↓	↓	MONO	↓	↓					unit 7, pin 20	Vac	31 mV ±3 mVrms				x	amplitude
13.19				DUAL							U7, IC 315 p.1	C/T	274.1 Hz				x	identification freq. DUAL
13.20				DUAL							unit 7, pin 20	OSC	m = 50 % ±5 %				x	AM pilot carrier DUAL
13.21	↓	↓	↓	STEREO	↓	↓					unit 7, pin 20	OSC	m = 50 % ±5 %				x	AM pilot carrier STEREO
13.22	↓	↓	↓	STEREO	↓	↓					U7, IC 315 p. 7	C/T	117.5 Hz				x	identification freq., STEREO

9. SAFETY INSPECTION AND TESTS AFTER REPAIR AND MAINTENANCE IN THE PRIMARY CIRCUIT

9.1. GENERAL DIRECTIVES

- Take care that creepage distances and clearances have not been reduced
- Before soldering, wires:
- should be bent through the holes of solder tags, or wrapped round the tag in the form of an open U, or, wiring ridigity shall be maintained by cable clamps or cable lacing.
- Replace all insulating guards and -plates.

9.2. SAFETY COMPONENTS

Components in the primary circuit may only be renewed by components selected by Philips, see also chapter 10.1.

9.3. CHECKING THE PROTECTIVE EARTH CONNECTION

The correct connection and condition is checked by visual control and by measuring the resistance between the protective-lead connection at the plug and the cabinet/frame. The resistance shall not be more than 0.5 Ω. During measurement the mains cable should be moved. Resistance variations indicate a defect.

9.4. CHECKING THE INSULATION RESISTANCE

Measure the insulation resistance at U = 500 Vdc between the mains connections and the protective lead connections. For this purpose set the mains switch to ON. The insulation resistance shall not be less than 2 MΩ.

Note:
2 MΩ is a minimum requirement at 40 ^{o}C and 95 % relative humidity. Under normal conditions the insulation resistance should be much higher (10 to 20 MΩ).

10. SPARE PARTS

10.1. GENERAL

The pattern generators PM 5515, PM 5516 and PM 5518 are repaired on single component level. No complete boards and modules are available at Concern Service Eindhoven.
Loaded PROMs must be ordered directly via Philips Supply Center Hamburg (please note software version).
In case of difficult faults central repair facility of the complete instrument is possible on special request via repair procedure at Supply Center Hamburg.
Conversion of an existing instrument to a different version is not foreseen.

Standard Parts

Electrical and mechanical parts replacement can be obtained through your local Philips organisation or representative. However, many of the standard electronic components can be obtained from other local suppliers. Before purchasing or ordering replacement parts, check the parts list for value, tolerance, rating and description.

NOTE: Physical size and shape of a component may affect instrument performance, particularly at high frequencies. Always use direct-replacement components, unless it is known that a substitute will not degrade instrument performance.

Special Parts

In addition to the standard electronic components, some special components are used;
- Components, manufactured or selected by Philips to meet specific performance requirements.
- Components which are important for the safety of the instrument marked with 'S' in the parts list.

ATTENTION: Both type of components may only be replaced by components obtained through your local Philips organisation.

10.2. STATIC SENSITIVE COMPONENTS

This instrument contains electrical components that are suspectible to damage from static discharge. Servicing static-sensitive assemblies or components should be performed only at a static-free work station by qualified service personnel.

10.3. HANDLING MOS DEVICES

Though all our MOS integrated circuits incorporate protection against electrostatic discharges, they can nevertheless be damaged by accidental over-voltages. In storing and handling them, the following precautions are recommended.

CAUTION: Testing or handling and mounting call for special attention to personal safety. Personnel handling MOS devices should normally be connected to ground via a resistor.

10.4. SOLDERING TECHNIQUES

Working method:
- Carefully unsolder one after the other the soldering tags of the semi-conductor.
- Remove all superfluous soldering material. Use a sucking iron or sucking litze wire.
- Check that the tags of the replacement part are clean and pre-tinned on the soldering places.
- Locate the replacement semi-conductor exactly on its place, and solder each tag to the relevant printed conductor on the circuit board.

NOTE: Bear in mind that the maximum permissible soldering time is 10 seconds during which the temperature of the tags must not exceed 250 °C. The use of solder with a low melting point is therefore recommended.
Take care not to damage the plastic encapsulation of the semi-conductor (softening point of the plastic is 150 °C).

ATTENTION: When you are soldering inside the instrument it is essential to use a low-voltage soldering iron, the tip of which must be earthed to ground of the instrument.

Suitable soldering irons should have temperature control and different types of nozzles (pin point tips), e.g. Weller Magnastat WTCP or WECP, Ersa TC 70/24 V.

If a higher wattage-rating soldering iron is used on the etched circuit boards (especially on the RF-units), excessive heat can cause the etched circuit wiring to seperate from the board base material.
In general use short-time heating with high tip temperature at a small point, avoid long time heating.

Chip components (RF modulator unit)

- Do not use unsoldered chips again
- For replacement take only specified components
- Do not use any adhesive to fix components
- Replaced chips must positioned flat on the pcb before soldering starts
- Use only resin-core solder tin with silver (60, 36, 4 Ag)

Working method:
- Carefully unsolder both soldering tags of the chip component. Avoid to lift printed conductor on the pcb.
- Remove all superfluous material. Use a sucking iron or sucking copper litze wire.
- Locate the replacement chip exactly in place
- An additional fixing point made by solder-tin could be efficient.
- Solder each tag to the relevant printed conductor on the pcb
- After a short cooling period resolder again the first soldered joint (tension release of the chip).

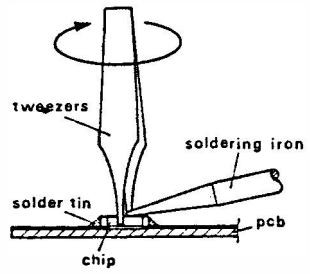

unsolder chip components

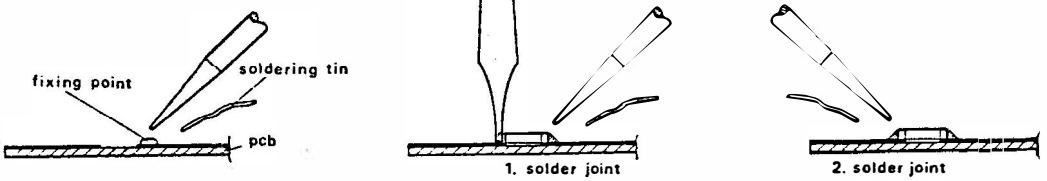

Replacement of chip components

10.5 PARTS LIST PM 5515, 5516, 5518

10.5.1 MECHANICAL PARTS, miscellaneous, parts not on units

Item	Fig.	Qty	Ordering code	Description
1		1	5322 447 90808	Cover
2	70A	1	5322 447 90809	Bottom
3	70A	4	5322 462 40756	Foot (bottom side)
4	70A	4	5322 492 64745	Spring plastic foot
5	70A	4	5322 462 44434	Rubber foot
6	70A	1	5322 405 90313	Tilting support
7	70C	1	5322 498 50176	Handle (rubber part)
8	70C	1	5322 462 40759	Steel insert f. handle
9	70C	2	5322 462 71444	Holder for handle
10	70D	1	5322 321 10388*S	Mains cable Europe
11	70D	1	5322 321 20816*S	Mains cable UK
12	70D	1	5322 321 10123*S	Mains cable USA
13		2	5322 462 40792	Foot (rear side)
14		1	5322 381 10837	Window for display
15		3	5322 414 30039	Knob
16		3	5322 414 70017	Cover for knob
17		29	5322 414 20032	Cap for pushbutton
18		1	5322 455 90455	Textplate PM 5515
19		1	5322 455 90456	Textplate PM 5515 X
20		1	5322 455 90457	Textplate PM 5515 T
21		1	5322 455 90458	Textplate PM 5515 TX
22		1	5322 455 90262	Textplate PM 5515 TXS
23		1	5322 455 90459	Textplate PM 5518
24		1	5322 455 90463	Textplate PM 5518 TX
25		1	5322 455 90263	Textplate PM 5518 TXS
28		1	5322 255 40336	IC Socket, 14-pole
29		3	5322 255 44047	IC Socket, 28-pole
501		1	5322 121 44028*S	XY-Capacitor 27nF/2.7nF
601		1	5322 101 40134	Potmeter 1K/LIN
602		1	5322 101 40135	Potmeter 10K/LIN
751A		1	5322 146 21243*S	Mains transformer 100/120/220/240 V
753		1	5322 105 40007	RF-Attenuator 75 Ohm
800		1	4822 253 30014*S	Fuse 315 MAT
-		1	4822 253 30018*S	Fuse 630 MAT
811		1	5322 276 12029*S	Mains switch
812		1	5322 265 30485*S	Mains socket + Fuse holder
821-824		4	5322 267 10004	BNC Connector
-		1	5322 390 80129	Soldering tin (4% AG)
MECHANICAL PARTS MAIN UNIT/U11				
27		2	5322 267 60186	Connector 29 pin (U1)
28		1	5322 267 50673	Connector 17 pin (U1)
29		7	5322 267 60187	Connector 26 pin (U2-U8)
30		7	5322 267 50674	Connector 14 pin (U2-U8)
31		16	5322 401 10992	Guide arm for units

*S = safety component

Item	Fig.	Qty	Ordering code	Description
51		1	4822 265 40465	Connector 6 pin, S51 (CIS)
52		1	5322 265 40594	Connector 7 pin, S52
72	70B	3	5322 255 40475	Insulating disc for regulator
73	70B	3	5322 255 44176	Insulating bush for regulator
801		1	5322 273 20238	Thumbwheel switch PAL
802		1	5322 273 20239	Thumbwheel switch SECAM
888		1	5322 265 51157	Scart connector
-		1	4822 267 60099	Scart plug (without cable)
889		1	5322 267 40687	DIN Socket AUDIO IN
MECHANICAL PARTS Y/C & RGB UNIT 5A				
X821-827		5	5322 321 21907	Cable connector 50 Ohm
-		5	5322 268 14141	Pin minicoax S3-S7
X841-847		5	5322 265 10266	Socket minicoax S3-S7
831-835		5	5322 267 10004	BNC Connector (rear)
-		1	5322 216 61503	Y/C Connector unit
-		1	5322 321 60789	S-VHS Connection cable

LOADED PROMS PM 5515 ... PM 5518

Loaded PROMs must be ordered directly via **Philips Supply Centre Hamburg,** Att. Mrs. Herbig, department HLO. Because of some customer specific software not all software is listed in the following table. In that case please order in clear text; note the software version indicated at the PROM, type number and serial number of your instrument.

Pos.no.	Software	PROM type e.g.	Ordering code	Remarks
CPU (MOTHERBOARD), PROGRAMM MEMORY				
313	C1.1	HM6264LP	5312 209 88583	no Hyperband
313	C2.3	HM6264LP	5312 209 88584	onwards 1986
313	C3.3	HN27C256G	5312 209 88585	incl. VPS
313	C4.4	HN27C256G	5312 209 88586	incl. GPIB
DIGITAL UNIT 1, PATTERN GENERATION				
332	P1.1	HN27C64G	5312 209 88587	
332	P2.0	HN27C64G	5312 209 88588	onwards 1990
TELETEXT UNIT 4 (ONLY PM 5515)				
306	T1	N82S129	5312 209 88591	decoding PROM
316	T1.0	HN2764	5312 209 88589	Teletext
TELETEXT/ANTIOPE (ONLY PM 5516, PM 5518)				
306	A1	N82S129	5312 209 88593	decoding PROM
316	U1.1	HN27C256	5312 209 88592	Teletext/Antiope

10.5.2 ELECTRICAL PARTS

Some parts are listed in chapter 10.5.1.

All metal film resistors not listed are of type **MRS 25 ± 1 % 0.6 W** (ordering code see end of this list).

Pos.no.	Description		Ordering code
UNIT 11, MAIN UNIT			
TRANSISTORS/U11			
305	Transistor	BC337-16	4822 130 41095
319,333	Transistor	BC558B	4822 130 44197
339,340	Transistor	BC548B	4822 130 40937
341	Transistor	BC558B	4822 130 44197
342	Transistor	BF246B	5322 130 44863
343,344	Transistor	BC548B	4822 130 40937
345-348	Transistor	BF246B	5322 130 44863
349,350	Transistor	BC548B	4822 130 40937
351-353	Transistor	BC558B	4822 130 44197
354	Transistor	BC338	3822 130 44121
390,391	Transistor	BF240	4822 130 40902
392	Transistor	BF494	4822 130 44195
394	Transistor	BC548B	4822 130 40937
395	Transistor	BC558B	4822 130 44197
396,399	Transistor	BF240	4822 130 40902
397,398	Transistor	BC548B	4822 130 40937
400	Transistor	BF246B	5322 130 44863
INTEGRATED CIRCUITS/U11			
301	Integr. circuit	78GU1C	5322 209 85565
302	Integr. circuit	79GU1C	5322 209 86349
304 *	Integr. circuit	LM317T	4822 209 80591
311	Integr. circuit	P8085AH-2	5322 209 83213
311*	Integr. circuit	M80C85	5322 209 73736
312	Integr. circuit	SN74LS373J	5322 209 86062
313	PROM (C/..)	PROGRAM	see page 10-4
314	Integr. circuit	P8155H	5322 209 14563
315	Integr. circuit	PCF8571P	4822 209 83571
316	Integr. circuit	SN74LS04N-00	4822 209 80783
318	Integr. circuit	SAB3036	5322 209 11374
321,331	Integr. circuit	HEF4094BD	5322 209 10421
322	Integr. circuit	HEF4011BD	4822 209 10247
323	Integr. circuit	HEF4050BD	4822 209 10261

* only NICAM, GPIB instruments

Pos.no.	Description				Ordering code
324	Integr. circuit	SAA1043P			5322 209 81468
325	Integr. circuit	HEF4011UBP			5322 209 82504
326	Integr. circuit	MM74HC4049N			5322 209 11375
327-329	Integr. circuit	MM74HC4050N			5322 209 11376
330	Integr. circuit	LM324N			4822 209 80587
335-338	Integr. circuit	MC3346P (CA3086)			5322 209 11225
393	Integr. circuit	MC1458N			4822 209 81349
DIODES/U11					
401	Rectifier	PL40			5322 130 50407
402	Rectifier	BY225-200			4822 130 50312
403-406	Diode	BYV95B			4822 130 41486
407	Diode, reference	BZX79-B6V8			4822 130 34278
411-423	Diode	BAW62			4822 130 30613
429	Diode, reference	BZX79-B30			4822 130 34328
431,432	Diode	BAW62			4822 130 30613
438-440	Diode	BAW62			4822 130 30613
442	Diode, reference	BZX79-B6V2			4822 130 34167
443,445	Diode, reference	BZX79-B4V7			4822 130 34174
444,462	Diode, reference	BZX79-B5V6			4822 130 34173
463	Diode	BAW62			4822 130 30613
464	Diode, reference	BZX79-B6V8			4822 130 34278
CAPACITORS/U11					
214,218	Cap. ceramic	0,022uF	80%	63V	4822 122 30103
215	Cap. ceramic	100nF	20%	50V	5322 122 32811
216,217	Cap. electrolyt.	10uF	50%	50V	4822 124 40435
220	Cap. foil	220nF	10%	40V	4822 121 41855
221	Cap. ceramic	0,022uF	80%	63V	4822 122 30103
222,576	Cap. ceramic	2,2pF	0,25pF	100V	4822 122 31036
223,225	Cap. solid alu.	10uF	20%	16V	4822 124 21314
224	Cap. ceramic	680pF	10%	100V	4822 122 30053
226,227	Cap. ceramic	10nF		100V	4822 122 31414
228	Cap. ceramic	12pF	2%	100V	4822 122 31056
501	Cap. electrolyt.	10000uF	20%	25V	5322 124 70411
502	Cap. electrolyt.	47uF		63V	4822 124 40433
503-505	Cap. electrolyt.	22uF		100V	4822 124 40764
506,510	Cap. electrolyt.	2200uF	50%	40V	4822 124 21324
507,508	Cap. ceramic	100nF	20%	50V	5322 122 32811
509,514	Cap. electrolyt.	22uF	50%	35V	4822 124 40434
511,512	Cap. ceramic	100nF	20%	50V	5322 122 32811
513	Cap. ceramic	1nF	10%	100V	4822 122 30027
517	Cap. ceramic	100nF	20%	50V	5322 122 32811
518,536	Cap. electrolyt.	10uF	50%	50V	4822 124 40435

Pos.no.	Description				Ordering code
519	Cap. electrolyt.	1uF	50%	63V	4822 124 40242
520	Cap. electrolyt.	100uF	50%	10V	4822 124 40178
525	Cap. electrolyt.	4,7uF	50%	63V	4822 124 40246
526-529	Cap. ceramic	0,022uF	80%	63V	4822 122 30103
531	Cap. ceramic	22pF	2%	100V	5322 122 32143
532	Cap. foil	1uF	10%	100V	5322 121 40197
533,538	Cap. electrolyt.	22uF	50%	35V	4822 124 40434
534	Cap. ceramic	1,5nF	10%	500V	4822 122 31169
537,555	Cap. electrolyt.	47uF	50%	10V	4822 124 40177
540	Cap. ceramic	47pF	2%	100V	4822 122 31072
541,542	Cap. trimmer	20pF			4822 125 50045
543,544	Cap. ceramic	27pF	2%	100V	4822 122 30045
545,546	Cap. ceramic	68pF	2%	100V	4822 122 31349
547-549	Cap. ceramic	0,022uF	80%	63V	4822 122 30103
550,569	Cap. ceramic	220pF	2%	100V	5322 122 34047
551-554	Cap. ceramic	0,022uF	80%	63V	4822 122 30103
559,560	Cap. electrolyt.	22uF	50%	35V	4822 124 40434
561	Cap. ceramic	0,68pF	0,25pF	500V	4822 122 31213
562	Cap. ceramic	39pF	2%	100V	4822 122 31069
563,566	Cap. ceramic	18pF	2%	100V	4822 122 31061
564	Cap. ceramic	12pF	2%	100V	4822 122 31056
565	Cap. ceramic	220pF	10%	100V	4822 122 30094
567	Cap. ceramic	8,2pF	0,25pF	100V	4822 122 31052
568	Cap. foil	470nF	10%	63V	5322 121 42467
570,572	Cap. ceramic	0,022uF	80%	63V	4822 122 30103
573	Cap. ceramic	1,5pF	0,25pF	100V	5322 122 32101
574,575	Cap. ceramic	0,022uF	80%	63V	4822 122 30103
577	Cap. chip	3,3pF	0,25pF	100V	4822 122 31821
578	Cap. electrolyt.	22uF	50%	35V	4822 124 40434

RESISTORS/U11

143,710	Potm. trimmer	470E	CARB	LIN	0,1W	4822 100 10038
153,612	Potm. trimmer	100E	CARB	LIN	0,1W	4822 100 10075
156	Potm. trimmer	22K	CARB	LIN	0,1W	4822 100 10051
606,611	Potm. trimmer	1K	CARB	LIN	0,1W	4822 100 10037
627,628	Res. metal film	4K7		2%	0,19W	5322 111 91115
664	Potm. trimmer	47K	CARB	LIN	0,1W	4822 100 10079
676	Potm. trimmer	1K	CARB	LIN	0,1W	4822 100 10037
696	Potm. trimmer	2K2	CARB	LIN	0,1W	4822 100 10029
717	Potm. trimmer	470E	CARB	LIN	0,1W	4822 100 10038

COILS/U11

805	Coil	22.8uH	5322 157 52793
806	Coil	7.1uH	5322 157 52794

Pos.no.	Description				Ordering code
RELAIS/U11					
880	Reed relais	12V			5322 280 20266
CRYSTALS/U11					
881	Crystal	5.034964 MHz			5322 242 71607
882	Crystal	5.000 MHz			5322 242 70718
883,884	Crystal	4.000 MHz			4822 242 70668
BATTERY/U11					
885	Battery lithium	3V			5322 138 10144
UNIT 1, DIGITAL UNIT					
INTEGRATED CIRCUITS/U1					
307,331	Integr. circuit	PC74HCT04P			4822 209 82341
308,336	Integr. circuit	HCB7LS174N			5322 209 81632
309	Integr. circuit	SN74LS161AN-00			5322 209 85915
310,320	Integr. circuit	HEF4094BD			5322 209 10421
311	Integr. circuit	PC74HCT393P			4822 209 83045
312-315	Integr. circuit	SN74LS161AN-00			5322 209 85915
316	Integr. circuit	PC74HCT109P			5322 209 11475
317-319	Integr. circuit	PC74HCT86P			5322 209 11473
321,327	Integr. circuit	PC74HCT00P			5322 209 11105
322-324	Integr. circuit	PC73HCT21P			5322 209 11491
325,329	Integr. circuit	PC74HCT08P			5322 209 11265
326,337	Integr. circuit	PC74HCT32P			5322 209 11266
328**	Integr. circuit	SN74LS74AN			4822 209 80782
332*	PROM (P/..)	PATTERN GENERATION			see page 10-4
333,334	Integr. circuit	PC74HCT273P			5322 209 11485
335	Integr. circuit	PC74HCT02P			5322 209 11106
338-348	Integr. circuit	PC74HCT08P			5322 209 11265
349	Integr. circuit	PC74HCT11P			4822 209 11427
377	Integr. circuit	N74LS37N			4822 209 80916
CAPACITORS/U1					
555-560	Cap. ceramic	0,022uF	80%	63V	4822 122 30103
561	Cap. electrolyt.	47uF	20%	10V	4822 124 40177
RESISTORS/U1					
626-628	Res. network	4K7 x 8	2%	0,19W	5322 111 91115

** only PM 5515

Pos.no.	Description		Ordering code
UNIT 1-VPS, DIGITAL UNIT VPS			
INTEGRATED CIRCUITS/U1-VPS			
307	Integr. circuit	PC74HCT04P	4822 209 82341
308	Integr. circuit	PC74HCT273P	5322 209 11485
309	Integr. circuit	PC74HCT161P	5322 209 11476
310,320	Integr. circuit	HEF4094BP	5322 209 10421
311	Integr. circuit	PC74HCT393P	4822 209 83045
312-315	Integr. circuit	PC74HCT161P	5322 209 11476
316	Integr. circuit	PC74HCT109P	5322 209 11475
317-319	Integr. circuit	PC74HCT86P	5322 209 11473
321,327	Integr. circuit	PC74HCT00P	5322 209 11105
322-324	Integr. circuit	PC74HCT21P	5322 209 11491
325	Integr. circuit	PC74HCT08P	5322 209 11265
326	Integr. circuit	PC74HCT32P	5322 209 11266
328	Integr. circuit	PC74HCT74P	5322 209 11109
329	Integr. circuit	PC74HCT08P	5322 209 11265
331	Integr. circuit	PC74HCT04P	4822 209 82341
332*	PROM (P/..)	PATTERN GENERATION	see page 10-4
333,334	Integr. circuit	PC74HCT273P	5322 209 11485
335	Integr. circuit	PC74HCT02P	5322 209 11106
336	Integr. circuit	PC74HCT174P	5322 209 11478
337,351	Integr. circuit	PC74HCT32P	5322 209 11266
338-348	Integr. circuit	PC74HCT08P	5322 209 11265
349	Integr. circuit	PC74HCT11P	4822 209 11427
350	Integr. circuit	N74LS37N	4822 209 80916
352	I.C. ROM	PCD8572P	5322 209 51263
356-359	Integr. circuit	PCF8574P	5322 209 10883
360,361	Integr. circuit	PC74HCT365P	5322 209 71651
362	Integr. circuit	HM6264LP-15	5322 209 50671
363	Integr. circuit	PC73HCT356P	5322 209 71652
364	Integr. circuit	PC74HCT86P	5322 209 11473
365	Integr. circuit	PC74HCT4075P	4822 209 11428
366	Integr. circuit	PC74HCT27P	5322 209 11472
367	Integr. circuit	PC74HCT00P	5322 209 11105
368	Integr. circuit	PC74HCT08P	5322 209 11265
369	Integr. circuit	PC74HCT109P	5322 209 11475
CAPACITORS/U1-VPS			
555	Cap. ceramic	0,022uF 80% 63V	4822 122 30103
561	Cap. electrolyt.	47uF 50% 10V	4822 124 40177
563	Cap. ceramic	2,2nF 10% 63V	4822 122 30114

Pos.no.	Description				Ordering code
RESISTORS/U1-VPS					
606	Res. metal film network 4K7				5322 111 91115
UNIT 2, PAL-NTSC UNIT					
TRANSISTORS/U2					
311	Transistor	BC548B			4822 130 40937
312,313	Transistor	BC558B			4822 130 44197
316,322	Transistor	BF450			4822 130 44237
317,318	Transistor	BC548B			4822 130 40937
319-321	Transistor	BF240			4822 130 40902
325-328	Transistor, FET	BF246B			5322 130 44863
INTEGRATED CIRCUITS/U2					
301,302	Integr. circuit	HEF4050BD			4822 209 10261
303,304	Integr. circuit	HEF4049BD			4822 209 10306
305	Integr. circuit	TDA2501			4822 209 82146
306	Integr. circuit	MC1458N			4822 209 81349
307	Integr. circuit	SAA1044P			5322 209 81724
DIODES/U2					
401,409	Diode	BAW62			4822 130 30613
403	Diode	BB212			4822 130 31129
404	Diode	BA482			5322 130 34955
405-407	Diode	BAW62			4822 130 30613
410-414	Diode	BAW62			4822 130 30613
CAPACITORS/U2					
501,505	Cap. ceramic	39pF	2%	100V	4822 122 31069
502,506	Cap. ceramic	100pF	2%	100V	4822 122 31316
503,507	Cap. ceramic	12pF	2%	100V	4822 122 31056
509	Cap. trimmer	2-10pF			4822 125 50062
510	Cap. ceramic	33pF	2%	100V	5322 122 32072
511	Cap. ceramic	0,022uF	80%	63V	4822 122 30103
512,513	Cap. ceramic	100nF	20%	50V	5322 122 32811
514	Cap. ceramic	120pF	2%	100V	4822 122 31348
515,529	Cap. ceramic	68pF	2%	100V	4822 122 31349
516,517	Cap. electrolyt.	100uF	50%	10V	4822 124 40178
518-520	Cap. ceramic	0,022uF	80%	63V	4822 122 30103
521,523	Cap. electrolyt.	22uF	50%	35V	4822 124 40434
522	Cap. electrolyt.	47uF	50%	10V	4822 124 40177
524	Cap. ceramic	0,022uF	80%	63V	4822 122 30103
528	Cap. ceramic	100pF	2%	100V	4822 122 31316

Pos.no.	Description				Ordering code
530,531	Cap. ceramic	0,022uF	80%	63V	4822 122 30103
532,548	Cap. ceramic	100nF	20%	50V	5322 122 32811
533-535	Cap. ceramic	1,5nF	10%	500V	4822 122 31169
536,543	Cap. ceramic	3,3nF	10%	100V	4822 122 30099
538-540	Cap. ceramic	0,022uF	80%	63V	4822 122 30103
541,542	Cap. ceramic	1nF	10%	100V	4822 122 30027
544-547	Cap. ceramic	0,022uF	80%	63V	4822 122 30103
551	Cap. ceramic	0,022uF	80%	63V	4822 122 30103
555	Cap. ceramic	100nF	20%	50V	5322 122 32811
556	Cap. ceramic	1nF	10%	100V	4822 122 30027
557	Cap. ceramic	12pF	2%	100V	4822 122 31056
RESISTORS/U2					
633	Potm. trimmer	10K CARB LIN		0,1W	4822 100 10035
662	Potm. trimmer	470E CARB LIN		0,1W	4822 100 10038
710	Resistor network	4.7K x 8	2%	0,19W	5322 111 91115
711	Resistor network	4.7K x 4	2%	0,19W	5322 116 90131
COILS/U2					
751,752	Coil	220uH			5322 157 52789
753	Coil	33uH			5322 157 52791
754	Coil	10uH			5322 157 52792
CRYSTALS/U2					
781	Crystal	3.579545MHz			4822 242 70105
782	Crystal	3.582056MHz			5322 242 70706
783	Crystal	3.575611MHz			5322 242 74083
784	Crystal	4.433619MHz			4822 242 70323
RELAIS/U2					
801	Reed relais	12V			5322 280 20266
UNIT 3, SECAM UNIT					
TRANSISTORS/U3					
304,307	Transistor	BF450			4822 130 44237
305,306	Transistor	BC548B			4822 130 40937
308	Transistor	BF240			4822 130 40902
309-311	Transistor	BC548B			4822 130 40937
314	Transistor	BF450			4822 130 44237
INTEGRATED CIRCUITS U3					
301,303	Integr. circuit	HEF4050BD			4822 209 10261
302	Integr. circuit	HEF4049BD			4822 209 10306
312	Integr. circuit	TDA2507			4822 209 82403
313	Integr. circuit	TDA2506			4822 209 82402

Pos.no.	Description				Ordering code
DIODES/U3					
401	Diode, reference	BZX79-B6V2			4822 130 34167
402	Diode	BAW62			4822 130 30613
CAPACITORS/U3					
501,503	Cap. foil	0,33uF	10%	63V	5322 121 42661
502,504	Cap. solid alu.	6,8uF	20%	25V	5322 124 14081
505,506	Cap. ceramic	150pF	2%	100V	4822 122 31413
509	Cap. ceramic	0,022uF	80%	63V	4822 122 30103
510	Cap. ceramic	33pF	2%	100V	5322 122 32072
511,525	Cap. ceramic	18pF	2%	100V	4822 122 31061
512	Cap. electrolyt.	47uF	50%	10V	4822 124 40177
513,515	Cap. tantal	680nF	20%	35V	5322 124 14039
514,516	Cap. foil	220nF	10%	40V	4822 121 41855
517,518	Cap. ceramic	0,022uF	80%	63V	4822 122 30103
519,520	Cap. electrolyt.	47uF	50%	10V	4822 124 40177
521,528	Cap. foil	470nF	10%	63V	5322 121 42467
522,524	Cap. electrolyt.	22uF	50%	35V	4822 124 40434
523	Cap. electrolyt.	47uF	50%	10V	4822 124 40177
526	Cap. ceramic	5,6pF	0,25pF	100V	5322 122 32163
527,537	Cap. ceramic	100pF	2%	100V	4822 122 31316
529	Cap. ceramic	180pF	2%	100V	5322 122 31907
530	Cap. ceramic	3,9nF	10%	100V	4822 122 30098
531	Cap. foil	470nF	10%	63V	5322 121 42467
532,538	Cap. ceramic	0,022uF	80%	63V	4822 122 30103
533	Cap. foil	1nF	1%	250V	4822 121 50566
534,536	Cap. ceramic	68pF	2%	100V	4822 122 31349
535,542	Cap. ceramic	1,5pF	0,25pF	100V	5322 122 32101
539,540	Cap. foil	470nF	10%	63V	5322 121 42467
541	Cap. ceramic	470pF	2%	100V	4822 122 32062
543	Cap. ceramic	100pF	2%	100V	4822 122 31316
544	Cap. foil	470nF	10%	63V	5322 121 42467
RESISTORS/U3					
611	Potm. trimmer	470E CARB LIN		0,1W	4822 100 10023
626	Potm. trimmer	1K CARB LIN		0,1W	4822 100 10021
COILS/U3					
751	Coil	1.5mH			5322 157 52797
752	Coil	0.9mH			5322 157 52796
753	Coil	33uH			5322 157 52791
754	Coil	10uH			5322 157 52792
757	Coil	13uH			4822 156 20861

Pos.no.	Description				Ordering code
FILTERS/U3					
755	Bandpass filter	4.43MHz			4822 154 90055
756	Bandpass filter	2.07MHz			4822 154 90059
UNIT 4, TELETEXT UNIT					
TRANSISTORS/U4					
319	Transistor	BC548B			4822 130 40937
320,321	Transistor	PH2369			4822 130 41594
322	Transistor	BC558			4822 130 40941
INTEGRATED CIRCUITS/U4					
301	Integr. circuit	PC74HCU04P			5322 209 11323
302	Integr. circuit	SN74LS04N-00			4822 209 80783
303,312	Integr. circuit	SN74LS74AN			4822 209 80782
304	Integr. circuit	N74LS169AN			4822 209 83451
307	Integr. circuit	N74LS175N			5322 209 84999
306*	PROM (T1)	DECODING PROM			see page 10-4
308	Integr. circuit	HEF4046BPB			5322 209 10459
309	Integr. circuit	ICL7621DCPA			5322 209 11292
310	Integr. circuit	N74LS20N			5322 209 85569
311	Integr. circuit	N74LS32N			5322 209 85311
313,314	Integr. circuit	N74LS169AN			4822 209 83451
315	Integr. circuit	SN74LS08N-00			5322 209 84995
317	Integr. circuit	N74LS273N			5322 209 85792
318	Integr. circuit	SN74LS151N-00			5322 209 86452
316*	PROM (T1.0)	TELETEXT DATA			see page 10-4
DIODES/U4					
401	Diode	BB112			4822 130 32227
402	Diode, reference	BZX79-B6V2			4822 130 34167
CAPACITORS/U4					
501	Cap. electrolyt.	47uF	50%	10V	4822 124 40177
502,508	Cap. electrolyt.	22uF	50%	35V	4822 124 40434
503	Cap. ceramic	56pF	2%	100V	4822 122 32027
504	Cap. ceramic	100pF	2%	100V	4822 122 31316
505	Cap. foil	100nF	10%	100V	5322 121 40323
506	Cap. ceramic	680pF	10%	100V	4822 122 30053
507	Cap. ceramic	0,022uF	80%	63V	4822 122 30103
509	Cap. ceramic	18pF	2%	100V	4822 122 31061
510	Cap. ceramic	2,2pF	0,25pF	100V	4822 122 31036
511	Cap. foil	100pF	1%	630V	4822 121 50562

Pos.no.	Description				Ordering code
512	Cap. chip	15pF	2%	100V	4822 122 31823
513,515	Cap. ceramic	10pF	2%	100V	4822 122 32185
514	Cap. chip	3,3pF	0,25pF	100V	4822 122 31821
521-523	Cap. ceramic	0,022uF	80%	63V	4822 122 30103
526-528	Cap. ceramic	0,022uF	80%	63V	4822 122 30103
RESISTOR/U4					
613	Potm. trimmer	220E CARB LIN		0,1W	4822 100 10026
COILS/U4					
751	Coil	22.8uH			5322 157 52793
752	Coil	7.1uH			5322 157 52794
CRYSTAL/U4					
781	Crystal	6.937500MHz			5322 242 71609
UNIT 4A, TELETEXT/ANTIOPE UNIT					
TRANSISTORS/U4A					
319	Transistor	BC548B			4822 130 40937
320,321	Transistor	PH2369			4822 130 41594
322	Transistor	BC558			4822 130 40941
323	Transistor	PC338			4822 130 44121
INTEGRATED CIRCUITS/U4A					
301	Integr. circuit	PC74HC00P			5322 209 83218
302	Integr. circuit	SN74LS04N-00			4822 209 80783
303,312	Integr. circuit	SN74LS74AN			4822 209 80782
304,305	Integr. circuit	N74LS169AN			4822 209 83451
307	Integr. circuit	N74LS175N			5322 209 84999
306*.	PROM (A1)	DECODING PROM			see page 10-4
308	Integr. circuit	HEF4046BPB			5322 209 10459
309	Integr. circuit	ICL7621DCPA			5322 209 11292
310	Integr. circuit	N74LS20N			5322 209 85569
311	Integr. circuit	N74LS32N			5322 209 85311
313,314	Integr. circuit	N74LS169AN			4822 209 83451
315	Integr. circuit	SN74LS08N-00			5322 209 84995
317	Integr. circuit	N74LS273N			5322 209 85792
318	Integr. circuit	SN74LS151N-00			5322 209 86452
316*	PROM (U1.1)	TELETEXT/ANTIOPE			see page 10-4
DIODES/U4A					
401,405	Diode	BB112			4822 130 32227
402	Diode, reference	BZX79-B8V2			4822 130 34382
403	Diode, reference	BZX79-B6V2			4822 130 34167
404	Diode, reference	BZX79-C2V4			4822 130 31253

Pos.no.	Description				Ordering code
CAPACITORS/U4A					
501	Cap. electrolyt.	47uF	50%	10V	4822 124 40177
502,508	Cap. electrolyt.	22uF	50%	35V	4822 124 40434
503,529	Cap. ceramic	56pF	2%	100V	4822 122 32027
504,530	Cap. ceramic	100pF	2%	100V	4822 122 31316
505	Cap. foil	100nF	10%	100V	5322 121 40323
506	Cap. ceramic	680pF	10%	100V	4822 122 30053
507	Cap. ceramic	0,022uF	80%	63V	4822 122 30103
509	Cap. ceramic	18pF	2%	100V	4822 122 31061
511	Cap. foil	100pF	1%	630V	4822 121 50562
512	Cap. chip	15pF	2%	100V	4822 122 31823
513,515	Cap. ceramic	10pF	2%	100V	4822 122 32185
514	Cap. ceramic	1,5pF	0,25pF	100V	5322 122 32101
521,528	Cap. ceramic	0,022uF	80%	63V	4822 122 30103
RESISTORS/U4A					
606	Res. high tens.	3.3M	5%	0,25W	4822 110 72201
613	Potm. trimmer	220E CARB LIN		0,1W	4822 100 10026
COILS/U4A					
751	Coil	22.8uH			5322 157 52793
752	Coil	7.1uH			5322 157 52794
CRYSTALS/U4A					
781	Crystal	6.93750MHz			5322 242 71609
782	Crystal	6.203125MHz			5322 242 71608
UNIT 5A, Y/C & RGB UNIT					
INTEGRATED CIRCUITS/U5A					
N101,N401	Integr. circuit	MC3346 (CA3086)			5322 209 11225
D101,D102	Integr. circuit	PC74HC4049P			5322 209 11341
TRANSISTORS/U5A					
V101,V103	Transistor	BC548B			4822 130 40937
V104	Transistor	BF247B			5322 130 62317
V201,V203	Transistor	BC548B			4822 130 40937
V301,V303	Transistor	BC548B			4822 130 40937
V304,V404	Transistor	BF247B			5322 130 62317
V401,V511	Transistor	BF240			4822 130 40902
V403,V513	Transistor	BC548B			4822 130 40937
V406,V522	Transistor	BF450			4822 130 44237
V512	Transistor	BF247B			5322 130 62317
V521	Transistor	BF240			4822 130 40902

Pos.no.	Description				Ordering code
V531	Transistor	BC548B			4822 130 40937
V541,V542	Transistor	BSR52			5322 130 60255
DIODES/U5A					
V102,V202	Diode	BZX79-B5V6			4822 130 34173
V302,V402	Diode	BZX79-B5V6			4822 130 34173
V543	Diode	BZW79-B5V1			4822 130 34233
CAPACITORS/U5A					
C101	Cap. ceramic	39pF	2%	NPO	4822 122 31069
C102,C202	Cap. ceramic	220pF	2%	N750	5322 122 32346
C103,C105	Cap. ceramic	18pF	2%	NPO	4822 122 31061
C104	Cap. ceramic	12pF	2%	NPO	4822 122 31056
C108-C110	Cap. ceramic	10nF	2%	NPO	4822 122 31414
C201	Cap. ceramic	39pF	2%	NPO	4822 122 31069
C203,C205	Cap. ceramic	18pF	2%	NPO	4822 122 31061
C204,C304	Cap. ceramic	12pF	2%	NPO	4822 122 31056
C208-C210	Cap. ceramic	10nF	2%	NPO	4822 122 31414
C211	Cap. ceramic	10pF	2%	NPO	4822 122 32185
C301	Cap. ceramic	33pF	2%	NPO	5322 122 32072
C302	Cap. ceramic	220pF	2%	N750	5322 122 32346
C303,C305	Cap. ceramic	18pF	2%	NPO	4822 122 31061
C308-C310	Cap. ceramic	10nF	2%	NPO	4822 122 31414
C404	Cap. ceramic	10pF	2%	NPO	4822 122 32185
C405-C410	Cap. ceramic	10nF	2%	NPO	4822 122 31414
C501,C502	Cap. electrolyt.	22uF		63V	5322 124 41301
C503	Cap. electrolyt.	47uF		63V	4822 124 40846
C505,C511	Cap. ceramic	10nF	2%	NPO	4822 122 31414
C512	Cap. ceramic	100nF	10%	100V	5322 122 33459
C513	Cap. ceramic	1pF	0,25pF	P100	4822 122 30104
C514	Cap. ceramic	100nF	10%	100V	5322 122 33459
C521-C533	Cap. ceramic	10nF	2%	NPO	4822 122 31414
C542	Cap. electrolyt.	22uF		63V	5322 124 41301
C555	Cap. ceramic	10nF	2%	NPO	4822 122 31414
COILS/U5A					
L101,L201	Coil	22.8uH			5322 157 52793
L102,L202	Coil	7.1uH			5322 157 52794
L301	Coil	22.8uH			5322 157 52793
L302	Coil	7.1uH			5322 157 52794
RESISTORS/U5A					
R521	Potm. trimmer	1k	20%	0.5W	5322 101 10974

Pos.no.	Description				Ordering code
MISCELLANEOUS/U5A					
X821-X827	Pin for minicoax connector				5322 268 14141
X841-X847	Socket for minicoax connector				5322 265 10266
	Y/C Connector unit				5322 216 61503
	S-VHS Connection cable				5322 321 60789
UNIT 6, MULTIBURST/CIRCLE UNIT					
TRANSISTORS/U6					
361,364	Transistor	BC558B			4822 130 44197
362,363	Transistor	BC548B			4822 130 40937
365,366	Transistor	2N2894A			5322 130 44127
367	Transistor, FET	BF245A			5322 130 44499
368,369	Transistor	BF494			4822 130 44195
370	Transistor	PH2369			4822 130 41594
371,374	Transistor	BC558B			4822 130 44197
372,373	Transistor	BC548B			4822 130 40937
377	Transistor	BC558B			4822 130 44197
378,385	Transistor	BC548C			4822 130 44196
386	Transistor	BC558B			4822 130 44197
INTEGRATED CIRCUITS/U6					
357	Integr. circuit	MC74HC4017N			5322 209 70698
358	Integr. circuit	LF347N			5322 209 70695
359	Integr. circuit	NE521N			5322 209 14441
Diodes/U6					
447	Diode, reference	BZX79-B6V8			4822 130 34278
448	Diode	BAW62			4822 130 30613
449	Diode, reference	BZX79-B3V0			4822 130 31881
450-453	Diode	BAW62			4822 130 30613
455-461	Diode	BAW62			4822 130 30613
CAPACITORS/U6					
201,202	Cap. electrolyt.	10uF	50%	50V	4822 124 40435
203	Cap. ceramic	1nF	10%	100V	4822 122 30027
204,205	Cap. foil	680pF	1%	250V	5322 121 54174
206,207	Cap. foil	130nF	1%	63V	5322 121 54121
208,582	Cap. ceramic	0,022uF	80%	63V	4822 122 30103
209,210	Cap. foil	100nF	10%	100V	5322 121 40323
211,212	Cap. ceramic	4,7nF	80%	63V	4822 122 31125
580,581	Cap. electrolyt.	22uF	50%	35V	4822 124 40434
583	Cap. ceramic	100pF	2%	100V	4822 122 31316
584,585	Cap. chip	4,7pF	0,25pF	100V	4822 122 31822

Pos.no.	Description				Ordering code
586-590	Cap. ceramic	0,022uF	80%	63V	4822 122 30103
591	Cap. ceramic	56pF	2%	100V	4822 122 32027
592	Cap. chip	4,7pF	0,25pF	100V	4822 122 31822
593	Cap. electrolyt.	22uF	50%	35V	4822 124 40434
594-596	Cap. ceramic	0,022uF	80%	63V	4822 122 30103
RESISTORS/U6					
112	Res. high tens.	10M CARB	5%	0,25W	4822 110 72214
114,116	Potm. trimmer	22K	LIN	0,1W	5322 101 44041
120	Potm. trimmer	220K CARB	LIN	0,1W	4822 100 10022
129	Potm. trimmer	4K7 CARB	LIN	0,1W	4822 100 10236
136,786	Potm. trimmer	2K2 CARB	LIN	0,1W	4822 100 10027
139	Res. high tens.	1.2M	5%	0,25W	4822 110 72189
140	Res. high tens.	3.3M	5%	0,25W	4822 110 72201
757	Potm. trimmer	470E CARB	LIN	0,1W	4822 100 10023
UNIT 7, LF-STEREO SOUND UNIT					
TRANSISTROS/U7					
351	Transistor	BC548B			4822 130 40937
354-362	Transistor	BC548B			4822 130 40937
INTEGRATED CIRCUITS/U7					
301,302	Integr. circuit	MC3346P (CA3086)			5322 209 11225
303	Integr. circuit	HEF4094BD			5322 209 10421
305	Integr. circuit	HEF4052BD			4822 209 10263
306	Integr. circuit	HEF4053BD			5322 209 10576
307	Integr. circuit	LF347N			5322 209 70695
311	Integr. circuit	HEF4040BD			4822 209 10257
312	Integr. circuit	HEF4082BD			4822 209 10271
313,317	Integr. circuit	HEF4526BD			4822 209 10289
314	Integr. circuit	HEF4018BP			5322 209 14118
315	Integr. circuit	MC1458N			4822 209 81349
316	Integr. circuit	HEF4046BPB			5322 209 10459
318	Integr. circuit	TAA765A			5322 209 85515
DIODES/U7					
401-404	Diode	BAW62			4822 130 30613
405-406	Diode, reference	BZX79-B3V0			4822 130 31881
407	Diode, reference	BZX79-B4V7			4822 130 34174
408-409	Diode, reference	BZX79-B8V2			4822 130 34382

Pos.no.	Description				Ordering code
CAPACITORS/U7					
501,507	Cap. electrolyt.	1uF	50%	63V	4822 124 40242
502,511	Cap. electrolyt.	100uF	50%	10V	4822 124 40178
503	Cap. ceramic	10nF		100V	4822 122 31414
504,506	Cap. foil	33nF	10%	400V	5322 121 44025
505,516	Cap. electrolyt.	10uF	50%	50V	4822 124 40435
508,510	Cap. ceramic	0,022uF	80%	63V	4822 122 30103
512	Cap. electrolyt.	2,2uF	50%	63V	4822 124 40244
513,536	Cap. electrolyt.	100uF	50%	10V	4822 124 40178
514,538	Cap. ceramic	100nF	20%	50V	5322 122 32811
515,517	Cap. foil	100nF	10%	100V	5322 121 40323
518	Cap. electrolyt.	1uF	50%	63V	4822 124 40242
519,520	Cap. ceramic	0,022uF	80%	63V	4822 122 30103
521,523	Cap. foil	1nF	1%	250V	4822 121 50566
522,524	Cap. foil	1,5nF	1%	160V	4822 121 50432
525-527	Cap. electrolyt.	4,7uF	50%	63V	4822 124 40246
531-534	Cap. foil	22nF	1%	63V	4822 121 50609
535	Cap. ceramic	0,022uF	80%	63V	4822 122 30103
537	Cap. ceramic	1nF	10%	100V	4822 122 30027
539,540	Cap. foil	390pF	2%	50V	5322 121 51047
541	Cap. ceramic	22pF	2%	100V	5322 122 32143
542	Cap. ceramic	220pF	2%	100V	5322 122 34047
543,545	Cap. electrolyt.	100uF	50%	10V	4822 124 40178
546,547	Cap. electrolyt.	100uF	50%	25V	4822 124 40207

UNIT 8, RF-STEREO SOUND UNIT

TRANSISTORS/U8

352,353	Transistor	BC548B	4822 130 40937
354-356	Transistor	BF450	4822 130 44237
357,362	Transistor	PH2369	4822 130 41594
358-361	Transistor	BF450	4822 130 44237
366,369	Transistor	BC548B	4822 130 40937
368	Transistor	BC548C	4822 130 44196
370	Transistor	BF450	4822 130 44237

INTEGRATED CIRCUITS/U8

301	Integr. circuit	HEF4053BD	5322 209 10576
302,306	Integr. circuit	HEF4046BPB	5322 209 10459
303	Integr. circuit	N74LS393N	4822 209 80447
304	Integr. circuit	N74LS11N	5322 209 85604
305	Integr. circuit	N74LS169AN	4822 209 83451

Pos.no.	Description				Ordering code
310	Integr. circuit	HEF4094BD			5322 209 10421
312	Integr. circuit	TL072CP			5322 209 70694
313	Integr. circuit	HEF4071BD			4822 209 10307
314	Integr. circuit	HEF4011UBP			5322 209 82504
363-365	Integr. circuit	N74LS169AN			4822 209 83451
DIODES/U8					
401	Diode, reference	BZX79-B4V7			4822 130 34174
402,403	Diode	BAW62			4822 130 30613
404,405	Diode	BB212			4822 130 31129
CAPACITORS/U8					
502,521	Cap. foil	100nF	10%	100V	5322 121 40323
503,511	Cap. foil	470pF	1%	630V	5322 121 54078
504,510	Cap. ceramic	68pF	2%	100V	4822 122 31349
505-508	Cap. ceramic	0,022uF	80%	63V	4822 122 30103
512-517	Cap. ceramic	0,022uF	80%	63V	4822 122 30103
519	Cap. foil	1uF	5%	50V	5322 121 42398
520,524	Cap. foil	220nF	10%	100V	4822 121 40232
522,523	Cap. ceramic	0,022uF	80%	63V	4822 122 30103
525	Cap. foil	1uF	10%	100V	5322 121 40197
526-529	Cap. ceramic	0,022uF	80%	63V	4822 122 30103
530,535	Cap. ceramic	1,5nF	10%	500V	4822 122 31169
531-534	Cap. ceramic	0,022uF	80%	63V	4822 122 30103
537,542	Cap. electrolyt.	47uF	50%	10V	4822 124 40177
538,544	Cap. ceramic	0,022uF	80%	63V	4822 122 30103
539,540	Cap. electrolyt.	100uF	50%	25V	4822 124 40207
541	Cap. electrolyt.	100uF	50%	10V	4822 124 40178
543	Cap. ceramic	6,8nF	50%	100V	4822 122 31429
RESISTORS/U8					
602,654	Potm. trimmer	2K2 CARB LIN		0,1W	4822 100 10027
614,638	Potm. trimmer	4K7 CARB LIN		0,1W	4822 100 10236
624,651	Res. high tens.	10M	5%	0,25W	4822 110 72214
COILS/U8					
751,752	Coil	5.5uH			5322 157 52795
753	Coil	100uH			5322 158 10243
754,755	Coil	220uH			5322 157 52789

Pos.no.	Description				Ordering code
UNIT 9, MONO SOUND UNIT					
TRANSISTORS/U9					
351,363	Transistor	BC548C			4822 130 44196
352,354	Transistor	BC548B			4822 130 40937
353	Transistor	BC558B			4822 130 44197
356,357	Transistor	BC548B			4822 130 40937
358,361	Transistor	BF450			4822 130 44237
362	Transistor	PH2369			4822 130 41594
364	Transistor	BF450			4822 130 44237
INTEGRATED CIRCUITS/U9					
301	Integr. circuit	MC3346P (CA 3086)			5322 209 11225
302	Integr. circuit	HEF4053BD			5322 209 10576
303	Integr. circuit	LF353N			5322 209 81395
304	Integr. circuit	TL071CP-00			4822 209 81315
305	Integr. circuit	HEF4046BPB			5322 209 10459
306	Integr. circuit	N74LS393N			4822 209 80447
307	Integr. circuit	N74LS169AN			4822 209 83451
308	Integr. circuit	N74LS11N			5322 209 85604
309	Integr. circuit	HEF 4094BD			5322 209 10421
310	Integr. circuit	HEF4001BD			4822 209 10246
311	Integr. circuit	HEF4071BD			4822 209 10307
312	Integr. circuit	HEF4011UBP			5322 209 82504
DIODES/U9					
401,402	Diode	BAW62			4822 130 30613
403,404	Diode, reference	BZX79-B8V2			4822 130 34382
406	Diode, reference	BZW79-B4V7			4822 130 34174
407	Diode	BAW62			4822 130 30613
408	Diode	BB212			4822 130 31129
409	Diode, reference	BZX79-B5V1			4822 130 34233
CAPACITORS/U9					
501	Cap. ceramic	0,022uF	80%	63V	4822 122 30103
502,509	Cap. electrolyt.	1uF	50%	63V	4822 124 40242
503	Cap. electrolyt.	2,2uF	50%	63V	4822 124 40244
504,533	Cap. electrolyt.	100uF	50%	10V	4822 124 40178
505	Cap. ceramic	100nF	20%	50V	5322 122 32811
506	Cap. electrolyt.	10uF	50%	50V	4822 124 40435
507,508	Cap. foil	100nF	10%	100V	5322 121 40323
510	Cap. foil	1,5nF	1%	160V	4822 121 50432
511	Cap. foil	1nF	1%	250V	4822 121 50566
512,515	Cap. ceramic	0,022uF	80%	63V	4822 122 30103

Pos.no.	Description				Ordering code
516	Cap. foil	470pF	1%	630V	5322 121 54078
517	Cap. ceramic	68pF	2%	100V	4822 122 31349
518,525	Cap. ceramic	0,022uF	80%	63V	4822 122 30103
526	Cap. foil	100nF	10%	100V	5322 121 40323
527	Cap. foil	220nF	10%	100V	4822 121 40232
528	Cap foil	1uF	10%	100V	5322 121 40197
529,534	Cap. ceramic	0,022uF	80%	63V	4822 122 30103
530	Cap. ceramic	4,7nF	80%	63V	4822 122 31125
531,532	Cap. electrolyt.	100uF	50%	25V	4822 124 40207
535,536	Cap. electrolyt.	47uF	50%	10V	4822 124 40177
537	Cap. ceramic	1,5nF	10%	500V	4822 122 31169
538,540	Cap. ceramic	0,022uF	80%	63V	4822 122 30103
539	Cap. ceramic	6,8nF	50%	100V	4822 122 31429
RESISTORS/U9					
629	Potm. trimmer	2K2 CARB LIN		0,1W	4822 100 10027
633	Res. high tens.	10M	5%	0,25W	4822 110 72214
644	Potm. trimmer	4K7 CARB LIN		0,1W	4822 100 10236
COILS/U9					
751	Coil	5.5uH			5322 157 52795
752	Coil	100uH			5322 158 10243
UNIT 10, RF-MODULATOR UNIT (32-900MHz)					
TRANSISTORS/U10					
301-306	Transistor	BF979			4822 130 41613
307	Transistor	BC558B			4822 130 44197
INTEGRATED CIRCUITS/U10					
351	Integr. circuit	OM350			5322 209 81008
352	Integr. circuit	SP4541			5322 209 82348
353	Integr. circuit	OM360			5322 209 81361
MIXER/U10					
354	Doub. bal mixer	TDK CB324M			5322 209 61906
DIODES/U10					
401,402	Diode	BB130			5322 130 32281
403-406	Diode	BB909A			5322 130 32162
407,408	Diode	BB405B			5322 130 34953
409	Diode	BB909A			5322 130 32162
411-416	Diode	BA482			5322 130 34955

Pos.no.	Description				Ordering code
417,418	Diode	BB909A			5322 130 32162
421,422	Diode	BA482			5322 130 34955
451-462	Diode	BA482			5322 130 34955
463,464	Diode	BB130			5322 130 32281
465	Diode	BA482			5322 130 34955
CAPACITORS/U10					
501,509	Cap. chip	1nF	10%	63V	5322 122 31998
503	Cap. ceramic	3,3nF	10%	100V	4822 122 30099
504,505	Cap. ceramic	1nF	10%	100V	4822 122 30027
508,513	Cap. ceramic	82pF	2%	100V	5322 122 32344
509,510	Cap. ceramic	1nF	10%	100V	4822 122 30027
511,516	Cap. chip	1nF	10%	63V	5322 122 31998
514,515	Cap. ceramic	1nF	10%	100V	4822 122 30027
517	Cap. ceramic	4,7pF	0,25pF	63V	5322 122 40423
518	Cap. ceramic	0,68pF	0,25pF	500V	4822 122 31213
519,520	Cap. ceramic	1nF	10%	100V	4822 122 30027
521	Cap. ceramic	0,68pF	0,25pF	63V	5322 122 40411
522,526	Cap. chip	1nF	10%	63V	5322 122 31998
523,525	Cap. ceramic	1nF	10%	100V	4822 122 30027
524,537	Cap. ceramic	100nF	10%	50V	5322 122 32941
527	Cap. ceramic	4,7pF	0,25pF	63V	5322 122 40423
528	Cap. ceramic	3,3pF	0,25pF	63V	4822 122 31821
529,530	Cap. ceramic	1nF	10%	100V	4822 122 30027
531-536	Cap. chip	1nF	10%	63V	5322 122 31998
538,542	Cap. chip	1nF	10%	63V	5322 122 31998
539	Cap. ceramic	1nF	10%	100V	4822 122 30027
540,544	Cap. ceramic	100nF	10%	50V	5322 122 32941
545,546	Cap. chip	1nF	10%	63V	5322 122 31998
547	Cap. ceramic	100nF	10%	50V	5322 122 32941
548,552	Cap. chip	1nF	10%	63V	5322 122 31998
550	Cap. ceramic	10nF		100V	4822 122 31414
551	Cap. foil	1nF	1%	250V	4822 121 50566
553	Cap. chip	220nF	10%	63V	5322 122 31999
554	Cap. ceramic	47pF	2%	100V	4822 122 31072
557,558	Cap. ceramic	1nF	10%	100V	4822 122 30027
559	Cap. chip	4p7	0,25pF	100V	4822 122 31822
572,573	Cap. ceramic	8p2	0,25pF	100V	4822 122 31052
574	Cap. ceramic	0,68pF	0,25pF	500V	4822 122 31213
575,578	Cap. ceramic	10pF	2%	100V	4822 122 32185
576,577	Cap. ceramic	22pF	2%	100V	5322 122 32143
579,582	Cap. ceramic	18pF	2%	100V	4822 122 31061

Pos.no.	Description				Ordering code
580,581	Cap. ceramic	39pF	2%	100V	4822 122 31069
583,586	Cap. ceramic	33pF	2%	100V	5322 122 32072
584,585	Cap. ceramic	47pF	2%	100V	4822 122 31072
587,588	Cap. foil	390pF	2%	50V	5322 121 51047
590-594	Cap. ceramic	1nF	10%	100V	5322 122 32331
595	Cap. chip	1nF	10%	63V	5322 122 31998
596	Cap. ceramic	6.8pF	0,25pF	100V	4822 122 31049

RESISTORS/U10

626	Res. metal film	1K1	5%	0,5W	4822 116 52205
627	Res. metal film	100R	5%	0,5W	4822 116 52175
628,630	Res. metal film	16R	5%	0,5W	4822 116 52183
629,655	Res. metal film	51R	5%	0,5W	4822 116 52196
631	Res. metal film	39K	5%	0,5W	4822 116 52277
632,634	Res. metal film	22K	5%	0,5W	4822 116 52257
633,635	Res. metal film	1KO	5%	0,5W	4822 116 52204
636,638	Res. metal film	22K	5%	0,5W	4822 116 52257
637,639	Res. metal film	1KO	5%	0,5W	4822 116 52204
640,676	Res. metal film	22K	5%	0,5W	4822 116 52257
641,677	Res. metal film	1KO	5%	0,5W	4822 116 52204
657	Res. metal film	33R	5%	0,5W	4822 116 52191
658	Res. metal film	68R	5%	0,5W	4822 116 52199
659	Res. metal film	82R	5%	0,5W	4822 116 52202
661	Res. metal film	75R	5%	0,5W	4822 116 52201
663	Res. metal film	24R	5%	0,5W	4822 116 52187
664	Res. metal film	51R	5%	0,5W	4822 116 52196
665,675	Res. metal film	16R	5%	0,5W	4822 116 52183
681-687	Res. metal film	1K1	5%	0,5W	4822 116 52205
688,689	Res. metal film	39K	5%	0,5W	4822 116 52277
690	Res. metal film	10R	5%	0,5W	4822 116 52176

COILS/U10

806	Coil	4.7uH			5322 158 10628
808	Coil	220uH			5322 157 52789

MECHANICAL PARTS/U10

851	Pin mini coax				5322 268 14141
852	Socket mini coax				5322 268 24116

Pos.no.	Description				Ordering code
UNIT 12, KEYBOARD/DISPLAY UNIT					
INTEGRATED CIRCUITS/U12					
301	Integr. circuit	SAA3007P			5322 209 72061
302	Integr. circuit	MM5450N			4822 209 10199
DIODES/U12					
401-433	LED	PLED H314-N2			5322 130 80692
442,442	Diode	BYV95B			4822 130 41486
DISPLAY/U12					
451	Display	SI35035			5322 130 90491
CAPACITORS/U12					
501	Cap. electrolyt.	47uF	50%	10V	4822 124 20678
502,504	Cap. ceramic	0,022uF	80%	63V	4822 122 30103
503,505	Cap. ceramic	2,2nF	10%	100V	4822 122 30114
506	Cap. ceramic	0,022uF	80%	63V	4822 122 30103
507	Cap. ceramic	100pF	2%	100V	4822 122 31316
RESISTORS/U12					
601,602	Potm. trimmer	47K CARB LIN		0,1W	4822 100 10079
CERAMIC RESONATOR/U12					
751	CERAMIC RESONATOR				5322 242 71606
SWITCHES/U12					
801-809	Switch				4822 276 11076
811-824	Switch				4822 276 11076
826-828	Switch				4822 276 11076
831-833	Switch				4822 276 11076

All resistors not listed are type MRS 25, 1 %, 0.6 W coding as follows:

4 8 2 2 0 5 0 2 x x x x

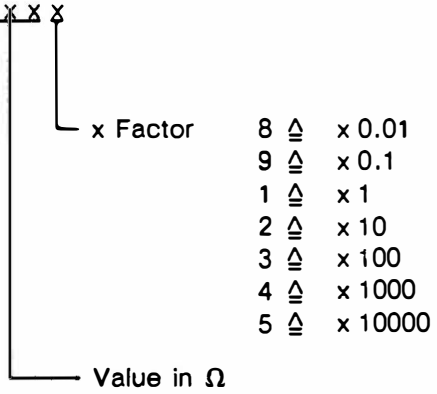

e.g. 4822 050 21052 ≙ 1K05

4822 050 22059 ≙ 20,5 Ω

4822 050 27874 ≙ 787 kΩ

Figures

CONTENTS OF FIGURES

Fig. 1 Combined line/field sync signal
Fig. 2 Greyscale, Colour bar, Multiburst, DEM (PAL D,G,I,N)
Fig. 3 Greyscale, Colour bar, Multiburst, DEM (PAL M, NTSC)
Fig. 4 Greyscale, Colour bar, Multiburst, DEM (vectors)
Fig. 5 Greyscale, Colour bar, Multiburst, VCR (PAL D,G,I,N)
Fig. 6 Greyscale, Colour bar, Multiburst, VCR (PAL M, NTSC)
Fig. 7 Greyscale, Colour bar, Multiburst, VCR (vectors)
Fig. 8 Colour bar (PAL/NTSC), amplitudes, vectors
Fig. 9 Nomenclature colour bar signals
Fig. 10 Crosshatch (PAL D,G,I,N)
Fig. 11 Crosshatch (PAL M, NTSC)
Fig. 12 Crosshatch, pulse form
Fig. 13 Crosshatch, centre indication
Fig. 14 Checkerboard (PAL/NTSC)
Fig. 15 Greyscale (PAL/NTSC)
Fig. 16 Multiburst (PAL/NTSC)
Fig. 17 DEM pattern (PAL D,G,I,N)
Fig. 18 DEM pattern (NTSC)
Fig. 19 DEM pattern (vectors)
Fig. 20 Colour bar (SECAM), amplitudes, frequency deviations
Fig. 21 Colour bar (SECAM), chroma amplitude
Fig. 22 DC-levels at sampling times (SECAM)
Fig. 23 White, Centre cross (SECAM)
Fig. 24 Greyscale, Colour bar, Multiburst, VCR (SECAM)
Fig. 25 Greyscale, Colour bar, Multiburst, DEM (SECAM)
Fig. 26 Identification, levels of teletext data line
Fig. 27 Identification, levels of antiope data line
Fig. 28 Levels in composite signal, details line-synchronising
Fig. 29 Field-synchronising waveforms (all systems except E, M)
Fig. 30 Field-synchronising waveforms (system M)
Fig. 31-33 R–G–B: Greyscale, Colour bar, Multiburst, DEM (PAL)
Fig. 34-36 R–G–B: Colour bar, PAL (not PAL I)
Fig. 37-39 R–G–B: Greyscale, Colour bar, Multiburst, DEM (NTSC)
Fig. 40-42 R–G–B: Colour bar (PAL M/NTSC)
Fig. 43 R–G–B output: SYNC
Fig. 44 R–G–B: Crosshatch (PAL/SECAM, not system M)
Fig. 45 R–G–B: Crosshatch (PAL M/NTSC)
Fig. 46-48 R–G–B: Colour bar (PAL I)
Fig. 49-50 Sync in GREEN
Fig. 51-53 Y-Signal (Y/C)
Fig. 52/54 Chroma signals (Y/C)
Fig. 55 Y-signal SECAM (Y/C)
Fig. 56 Chroma signal SECAM (Y/C)
Fig. 57 Notch filter 3 MHz
Fig. 58 Service kit
Fig. 70 Spare parts: mechanical parts, mains cable
Fig. 100 Block diagram PM 5518
Fig. 101 –X/–TX: Second sound/stereo sound: connection diagram
Fig. 102 –T/–TX: Teletext block diagram
Fig. 103 Overall circuit diagram, survey of units and versions
Fig. 104 Unit 11: Motherboard, component lay-out
Fig. 105 Unit 11: Mo therboard, part 1: master oscillator
sync pulse generator
connections with other units
Fig. 106 Unit 11: Motherboard, part 2: CPU, power supply

Fig. 107 Unit 11: Motherboard, part 3: chroma attenuator, video amplifiers

Fig. 108 Unit 1: digital unit, component lay-out
Fig. 108A Unit 1: digital unit/VPS, component lay-out
Fig. 109 Unit 1: digital unit
Fig. 109A Unit 1: digital unit/VPS, part 1
Fig. 109B Unit 1: digital unit/VPS, part 2
Fig. 110 Unit 2: PAL/NTSC unit
Fig. 111 Unit 3: SECAM unit
Fig. 111A Unit 3: SECAM unit, block diagram

Fig. 112 Unit 4: Teletext unit, component lay-out
Fig. 113 Unit 4: Teletext unit
Fig. 114 Unit 4A: Teletext / Antiope unit, component lay-out
Fig. 115 Unit 4A: Teletext / Antiope unit

Fig. 116 Unit 5: Y/C & RGB unit, component lay-out
Fig. 117 Un it 5: Y/C & RGB unit
Fig. 118 Unit 6: multiburst/circle unit, component lay-out
Fig. 119 Unit 6: multiburst/circle unit

Fig. 120 Unit 7: LF dual/stereo sound unit, component lay-out
Fig. 121 Unit 7: LF dual/stereo sound unit
Fig. 122 Unit 8: RF dual/stereo sound unit, component lay-out
Fig. 123 Unit 8: RF dual/stereo sound unit
Fig. 124 Unit 9: mono sound AM/FM unit, component lay-out
Fig. 125 Unit 9: mono sound AM/FM unit

Fig. 126 Unit 10: RF unit 32 – 900 MHz, component lay-out
Fig. 127 Unit 10: RF unit 32 – 900 MHz
Fig. 128 Unit 12: keyboard/display unit

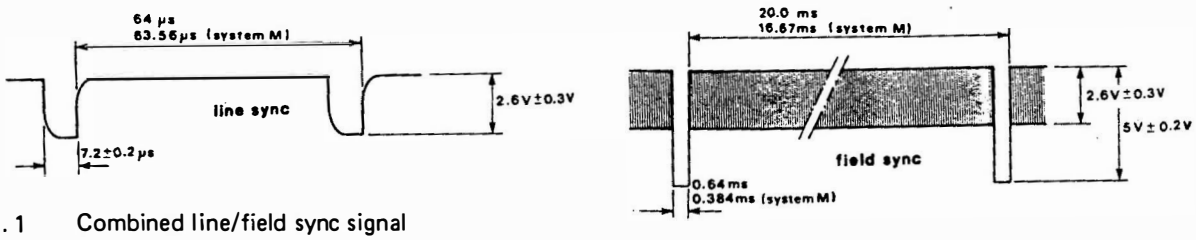

Fig. 1 Combined line/field sync signal

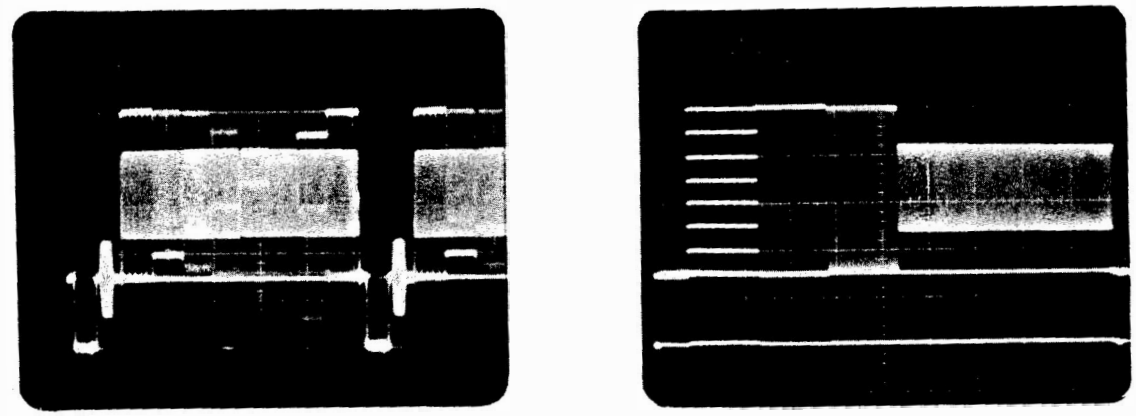

Line Field

Fig. 2 Greyscale, Colour bar, Multiburst, DEM (PAL D,G,I,N)

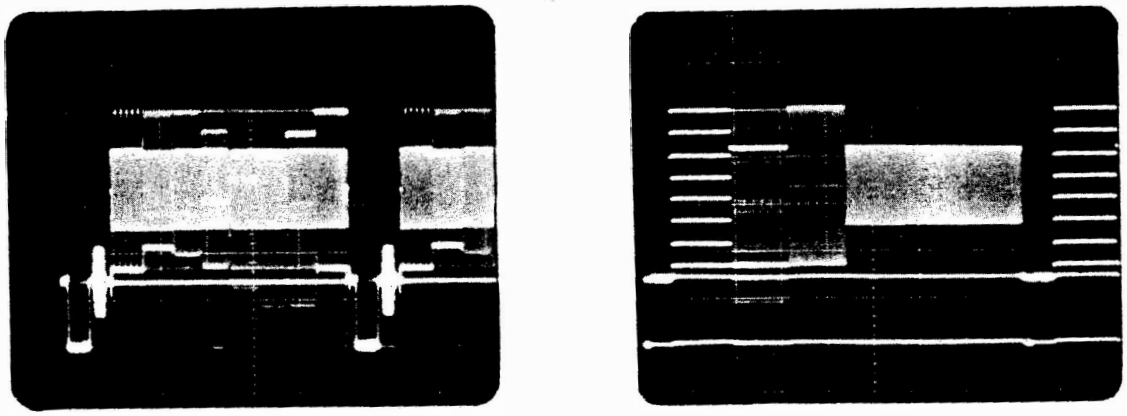

Line Field

Fig. 3 Greyscale, Colour bar, Multiburst, DEM (PAL M, NTSC)

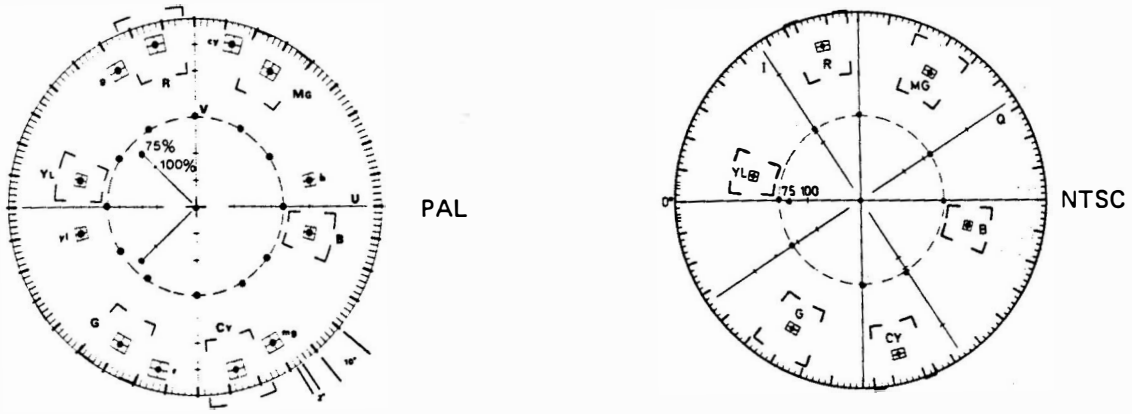

Fig. 4 Greyscale, Colour bar, Multiburst, DEM

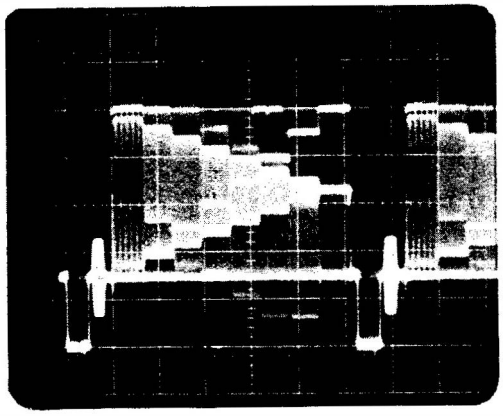

Line

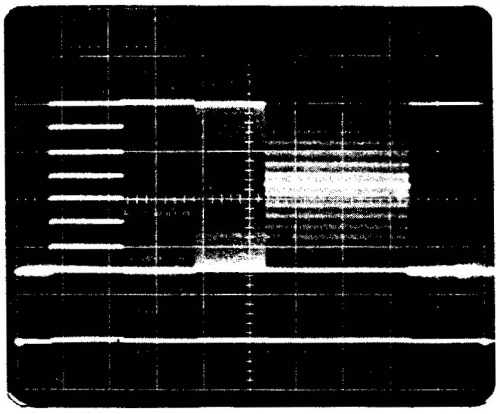

Field

Fig. 5 Greyscale, Colour bar, Multiburst, VCR (PAL D,G,I,N)

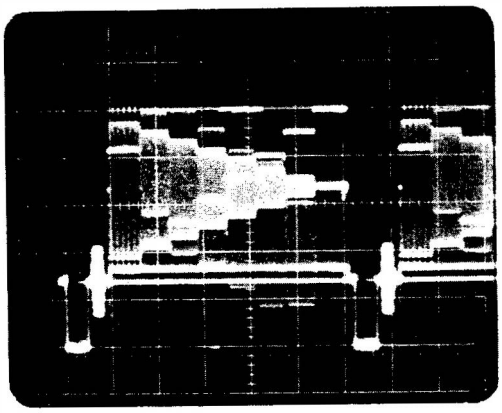

Line

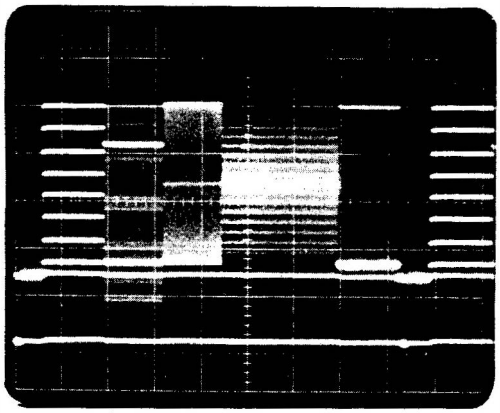

Field

Fig. 6 Greyscale, Colour bar, Multiburst, VCR (PAL M, NTSC)

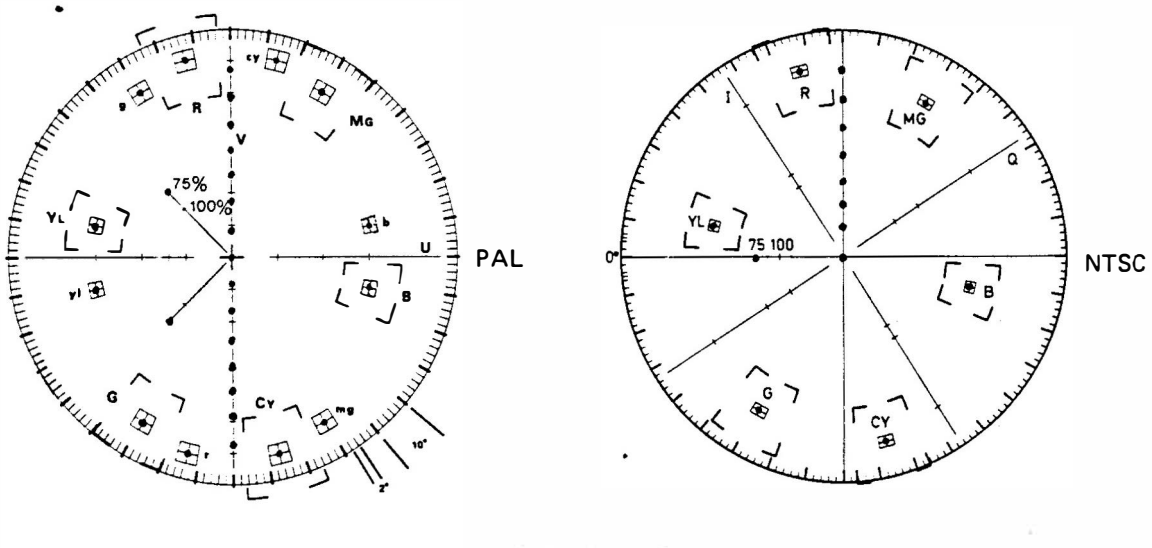

Fig. 7 Greyscale, Colour bar, Multiburst, VCR

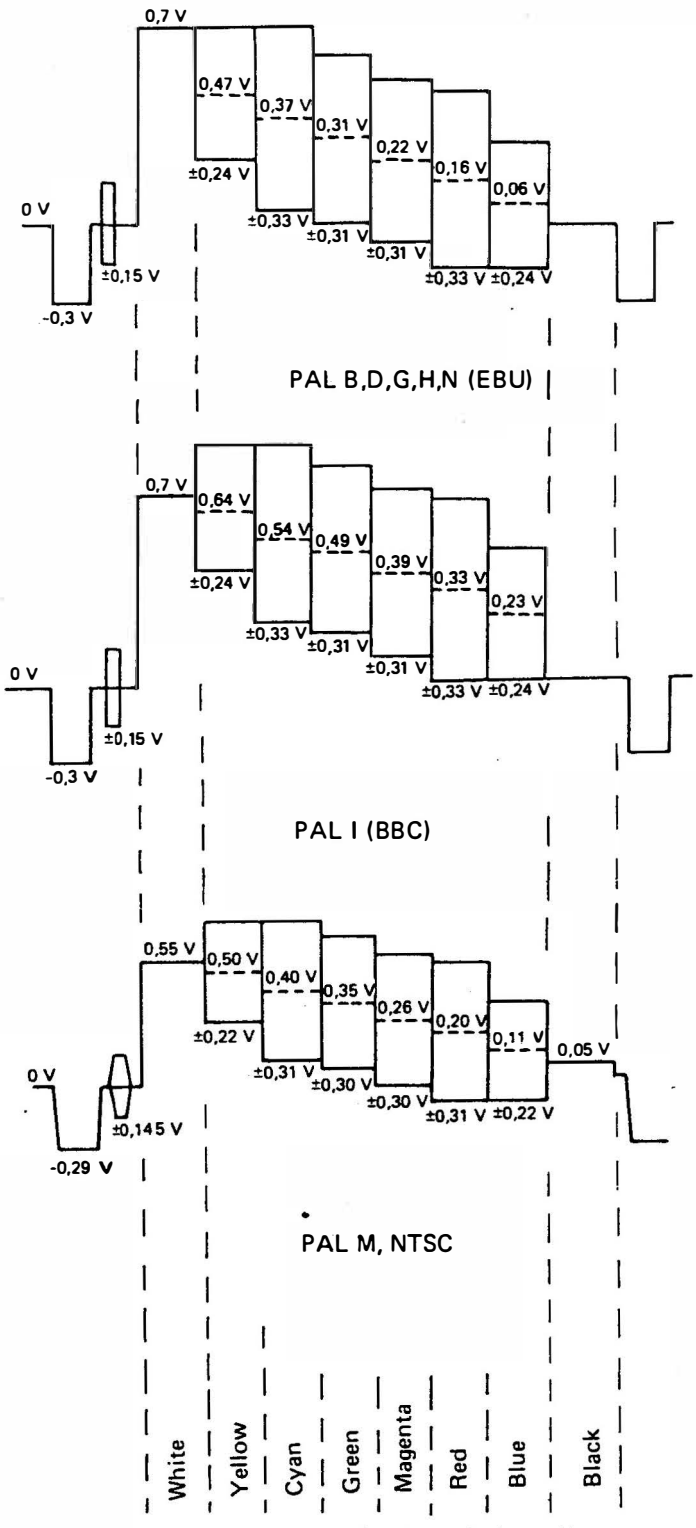

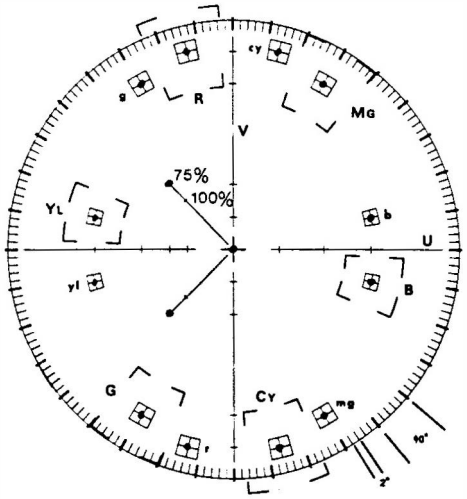

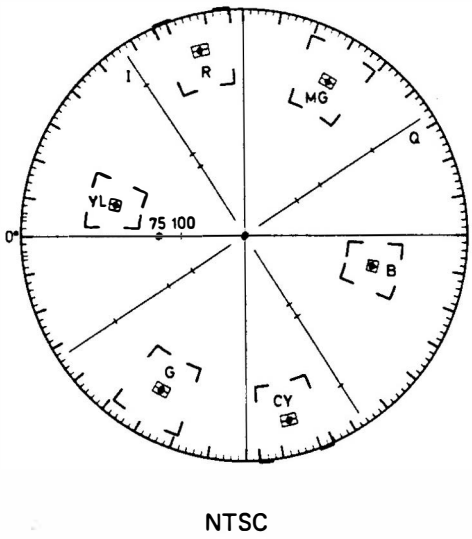

Fig. 8 Colour bar (PAL/NTSC)

According to CCIR recommendation the following nomenclature is used to identify and distinguish between colour bar signals in different systems.

	signal level relative to peak white (%) A B C D	system
colour bars	100 / 0 / 75 / 0 (E.B.U.)	B, D, G, H, K, K1, L, N
colour bars	100 / 0 / 100 / 25 (B.B.C.)	PAL I
colour bars	77 / 7.5 / 77 / 7.5	PAL M, NTSC M

A – the primary colour signal level during the transmission of the "white" colour bar;

B – the primary colour signal level during the transmission of the "black" colour bar;

C – the maximum level of the primary colour signal during transmission of "coloured" colour bars;

D – the minimum level of the primary colour signal during transmission of "coloured" colour bars.

Relative amplitudes of different colour bar signals:

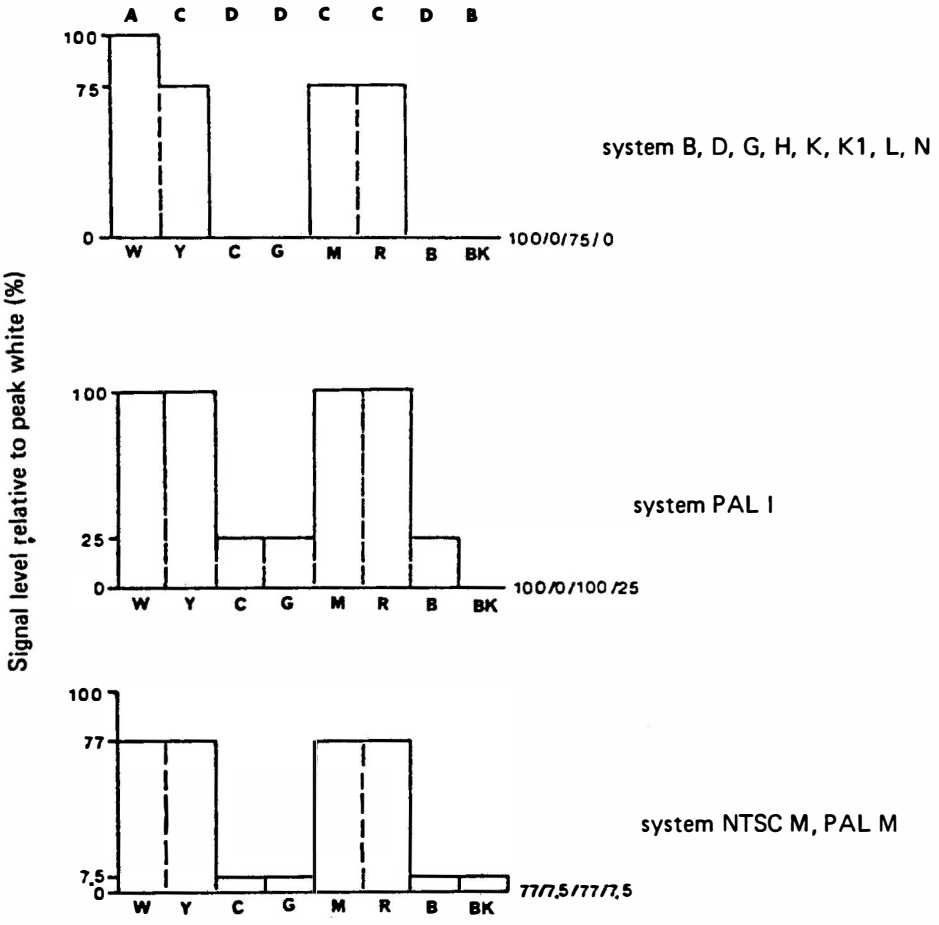

W: white Y: yellow C: cyan G: green M: magenta R: red B: blue BK:black

Fig. 9 Nomenclature of colour bar signals

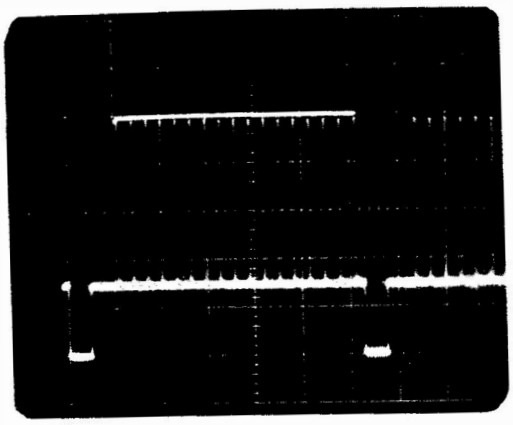

Line

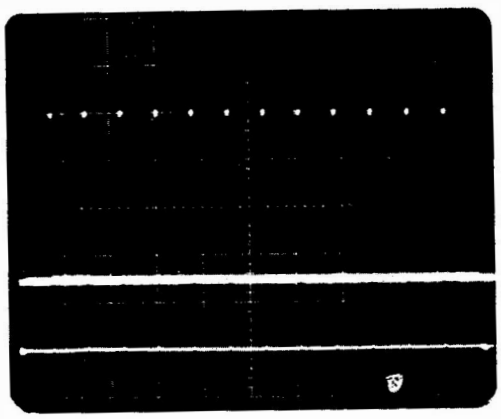

Field

Fig. 10 Crosshatch (PAL D,G,I,N)

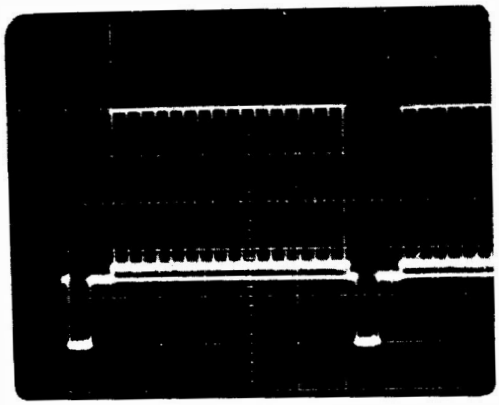

Line

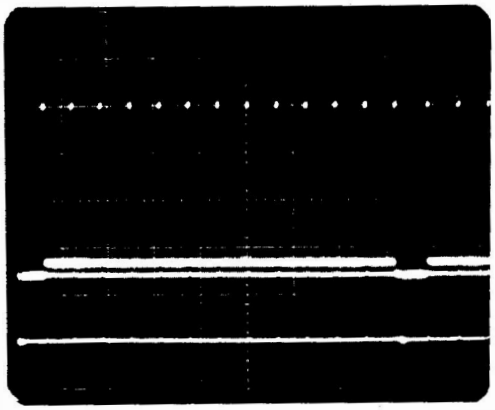

Field

Fig. 11 Crosshatch (PAL M, NTSC)

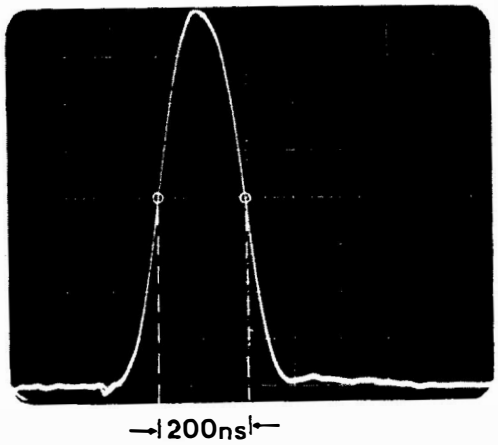

Fig. 12 Crosshatch, pulse form

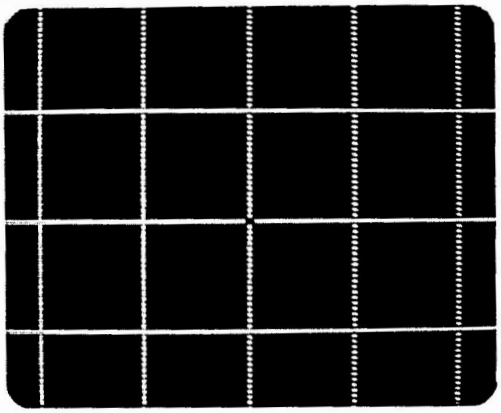

Fig. 13 Crosshatch, centre indication

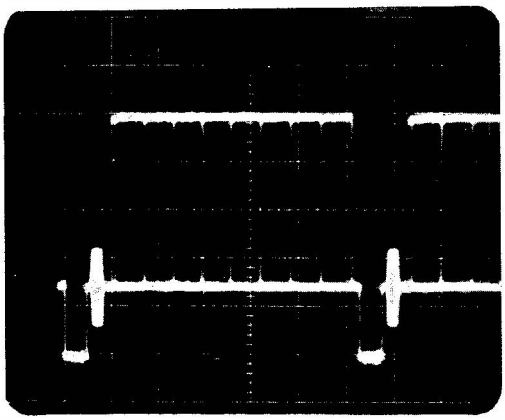

Line PAL D,G,I,N

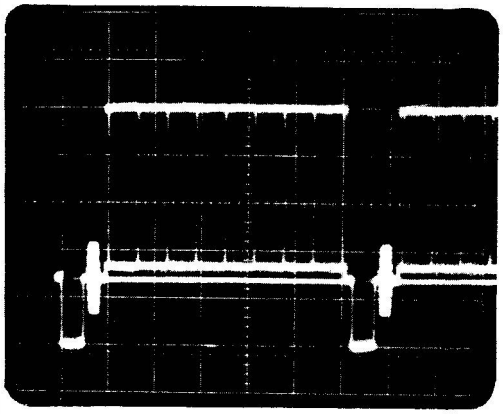

Line PAL M, NTSC

Fig. 14 Checkerboard (PAL/NTSC)

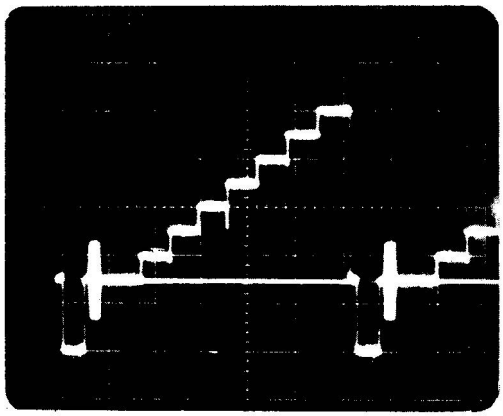

Line PAL D,G,I , N

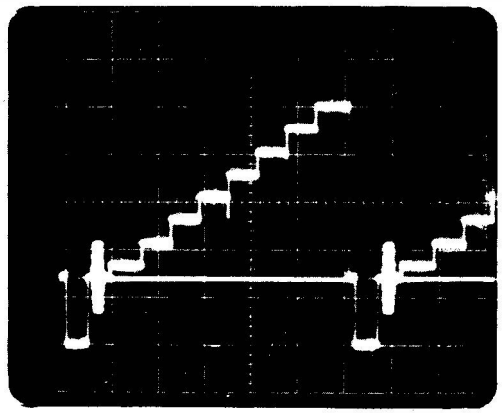

Line PAL M, NTSC

Fig. 15 Greyscale (PAL/NTSC)

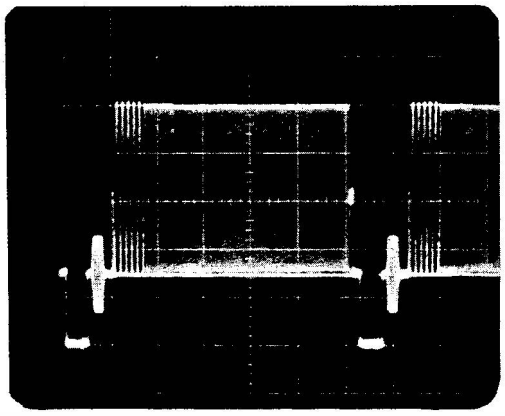

Line PAL D,G,I,N

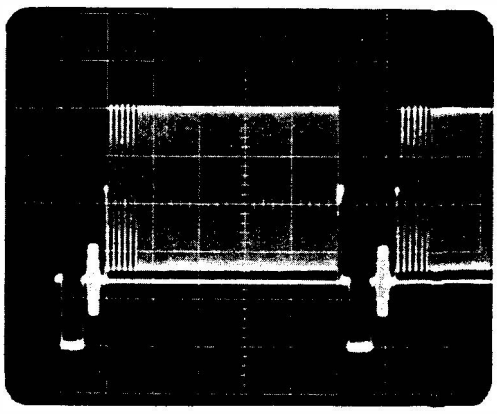

Line PAL M, NTSC

Fig. 16 Multiburst (PAL/NTSC)

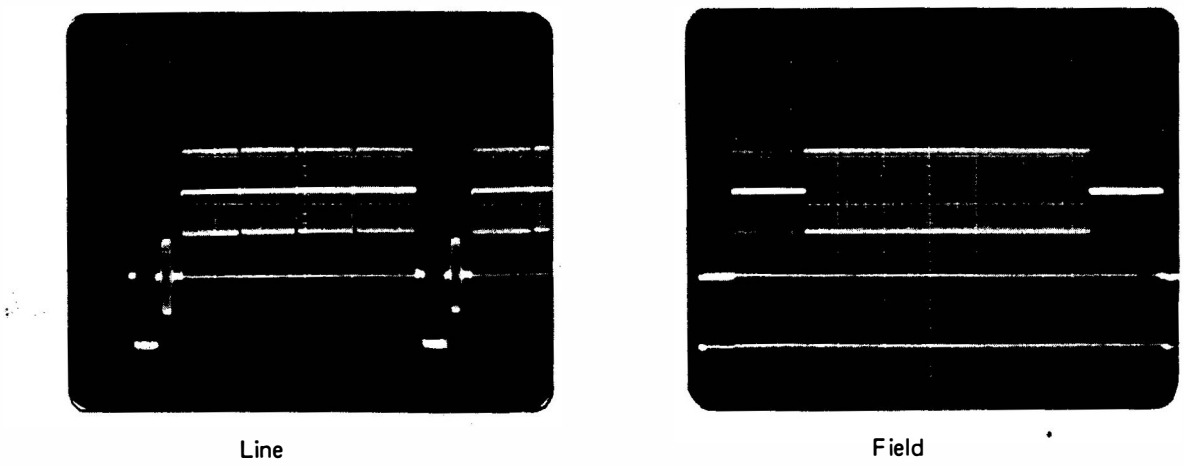

Line Field

Fig. 17 DEM pattern (PAL D,G,I,N)

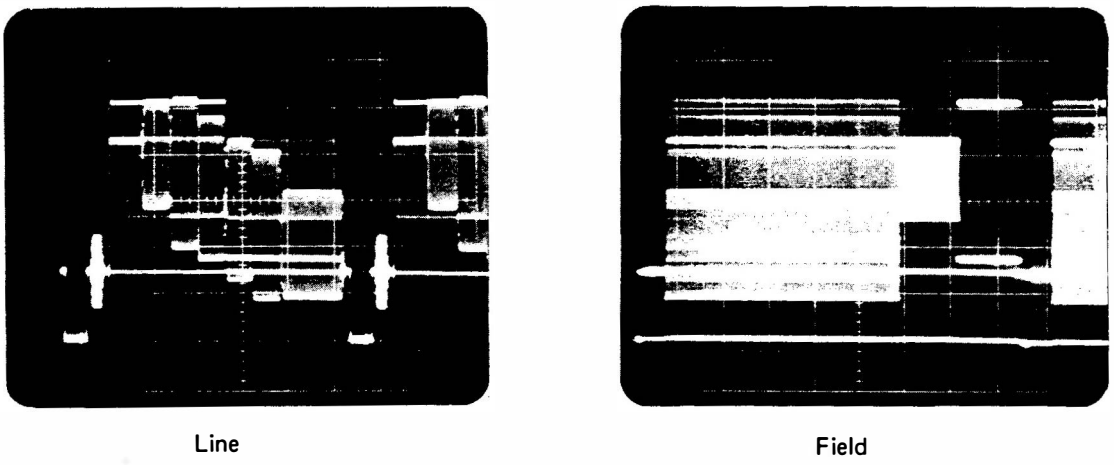

Line Field

Fig. 18 DEM pattern (NTSC)

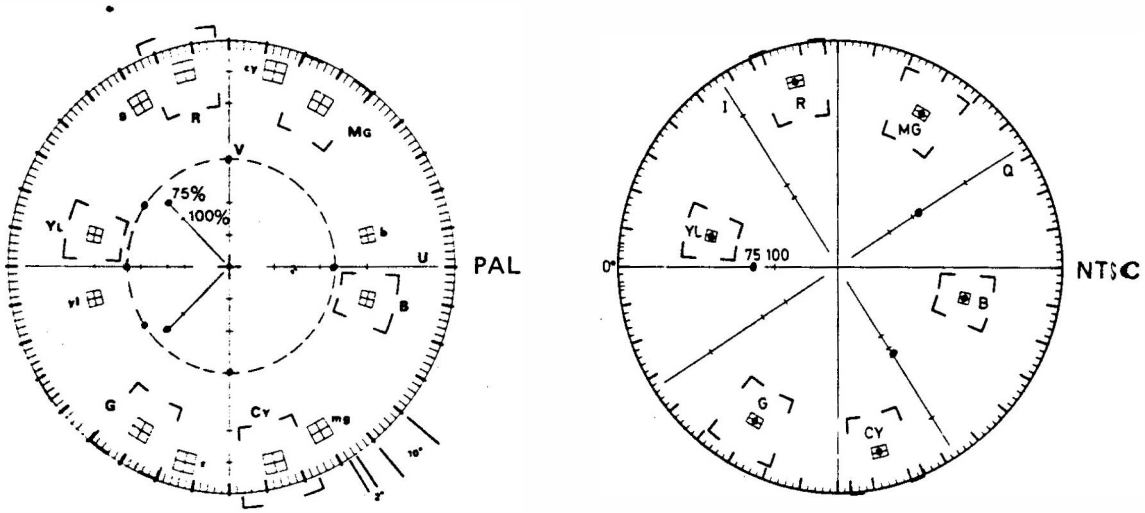

Fig. 19 DEM pattern (vectors)

Bar	Colour	Subcarrier f_{OR} = 4.406 MHz	
		Deviation (kHz)	Amplitude (mV)
1	White	0	213
2	Yellow	- 45.5	183
3	Cyan	+280	475
4	Green	+234.5	430
5	Magenta	-234.5	211
6	Red	-280	251
7	Blue	+ 45.5	251
8	Black	0	213
Identification line		+350	540

Transmission of D'R signal

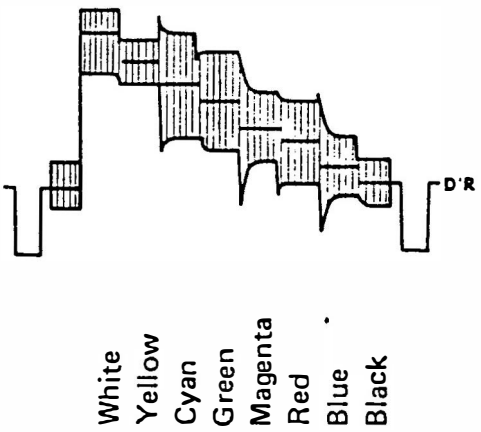

Bar	Colour	Subcarrier f_{OB} = 4.250 MHz	
		Deviation (kHz)	Amplitude (mV)
1	White	0	166
2	Yellow	-230	362
3	Cyan	+ 77.6	168
4	Green	-152.4	279
5	Magenta	+152.4	210
6	Red	- 77.6	210
7	Blue	+230	276
8	Black	0	166
Identification line		-350	497

Transmission of D'B signal

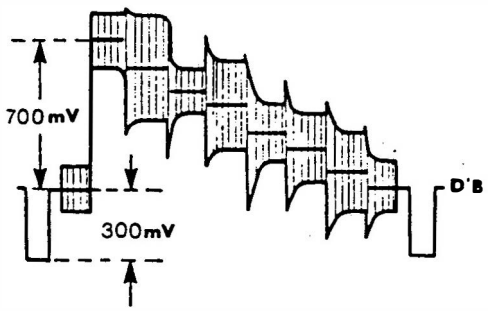

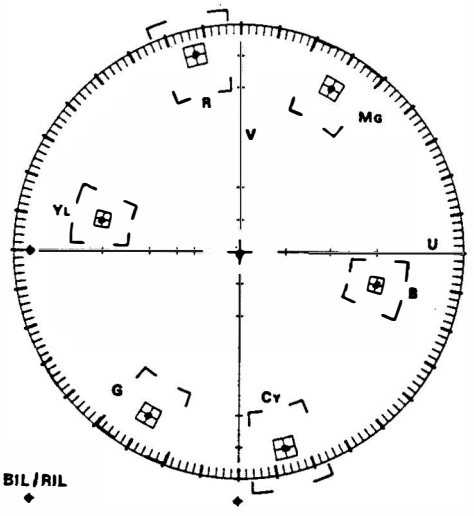

SECAM

Fig. 20 TV system SECAM
Amplitudes, frequency deviations and composite signal for colour bar at 75 % amplitude (100/0/75/0)

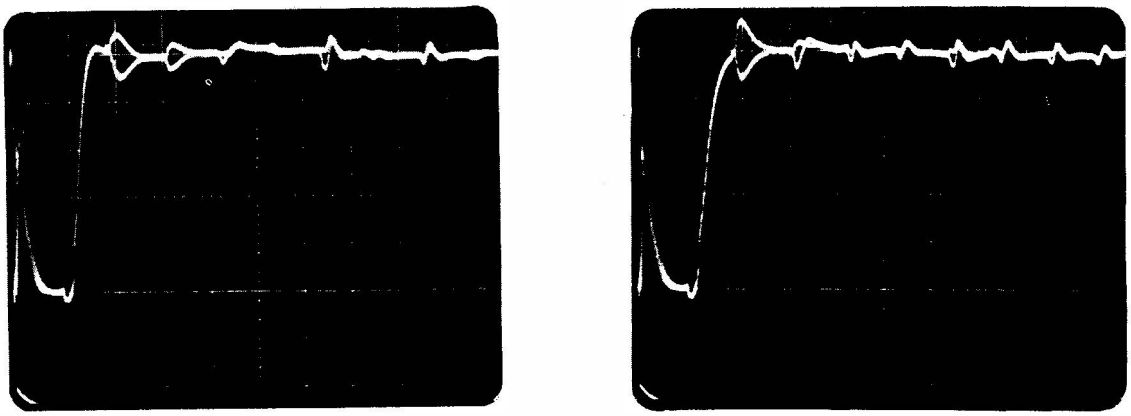

DR component

DB component

Fig. 21 Colour bar (SECAM), Chroma amplitude measured with Vecamscope TTV 8300

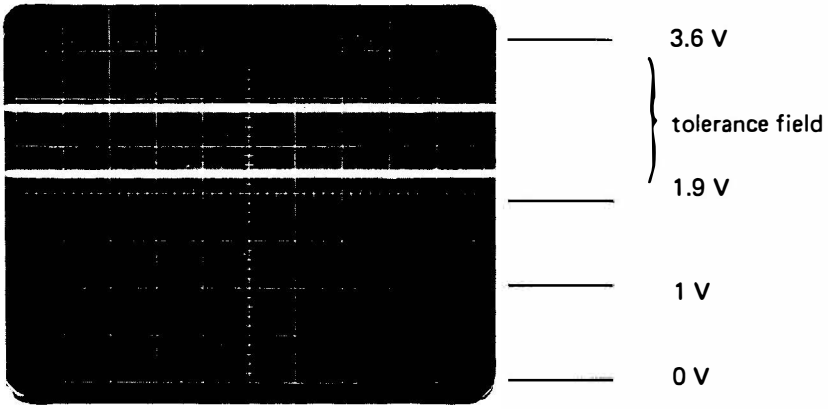

Fig. 22 DC-levels at sampling times (SECAM)

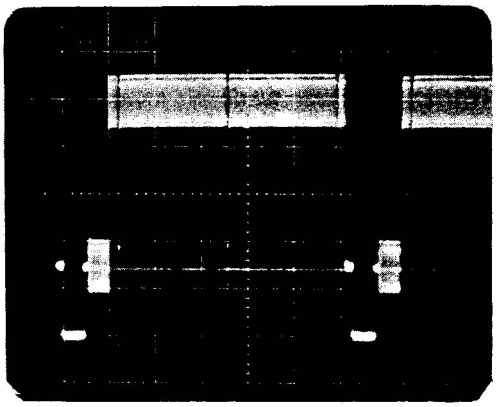

Fig. 23 White, Centre cross (SECAM)

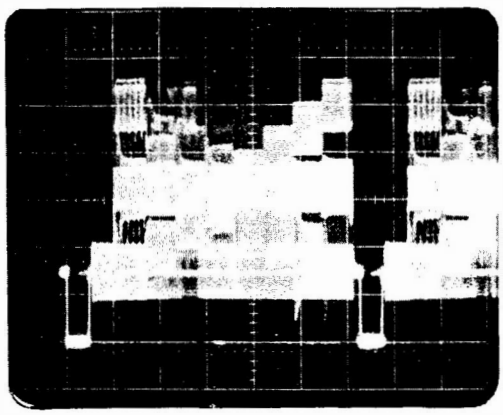

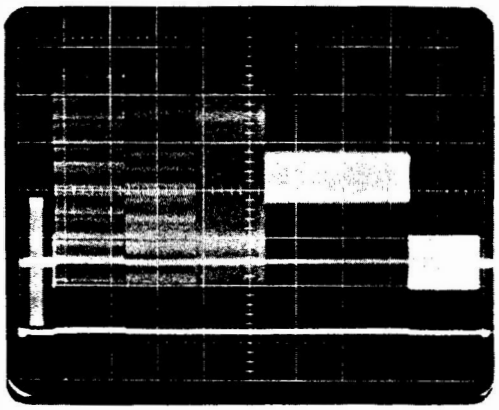

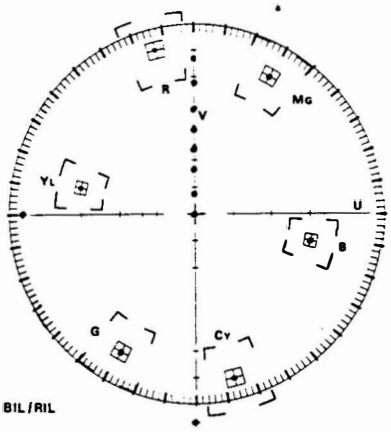

Fig. 24 Greyscale, Colour bar, Multiburst, VCR (SECAM)

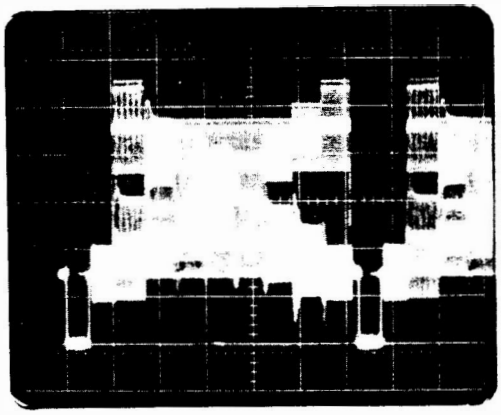

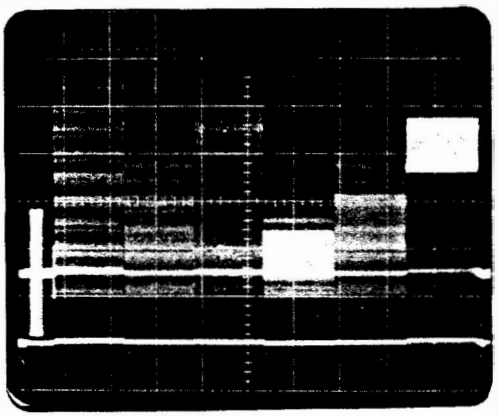

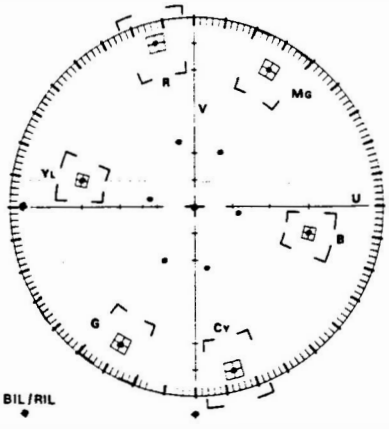

Fig. 25 Greyscale, Colour bar, Multiburst, DEM (SECAM)

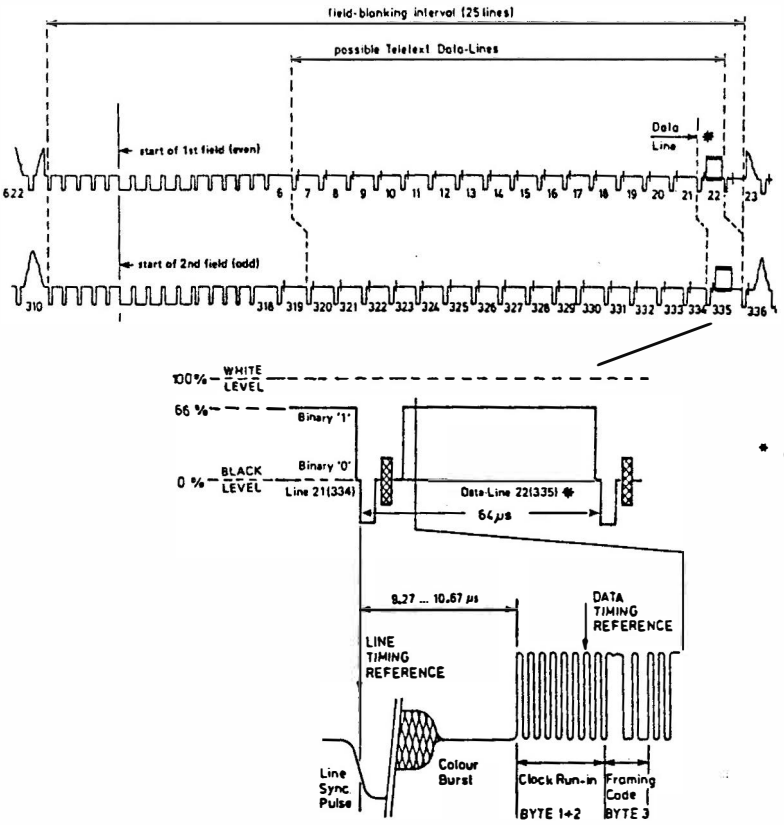

* data lines 21/334 onwards 1991 *

Fig. 26 Identification and levels of a teletext data line

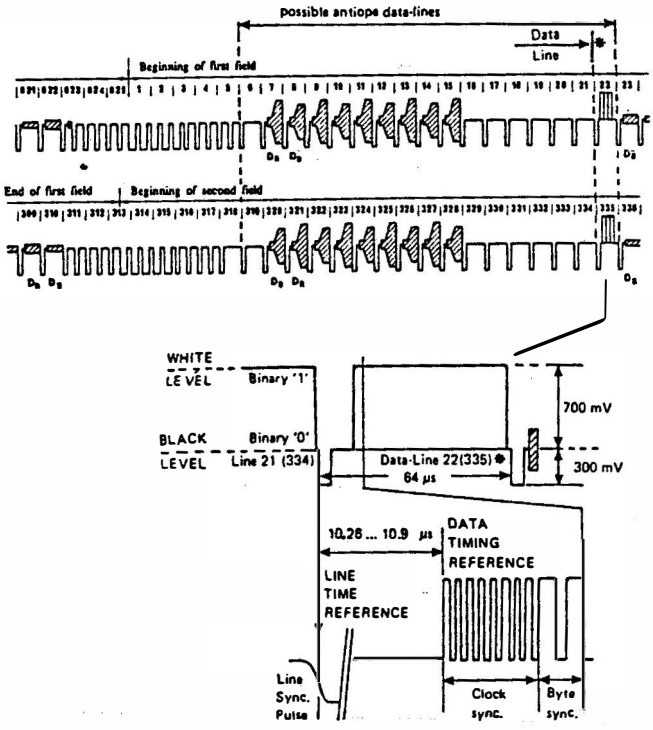

* data lines 21/334 onwards 1991

Fig. 27 Identification and levels of an antiope data line

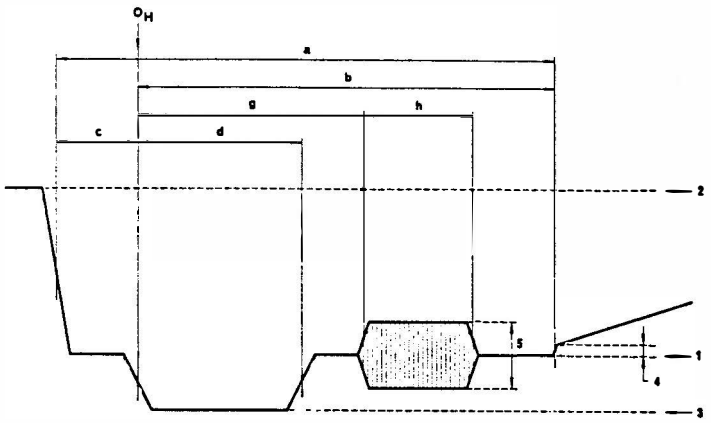

PAL and NTSC

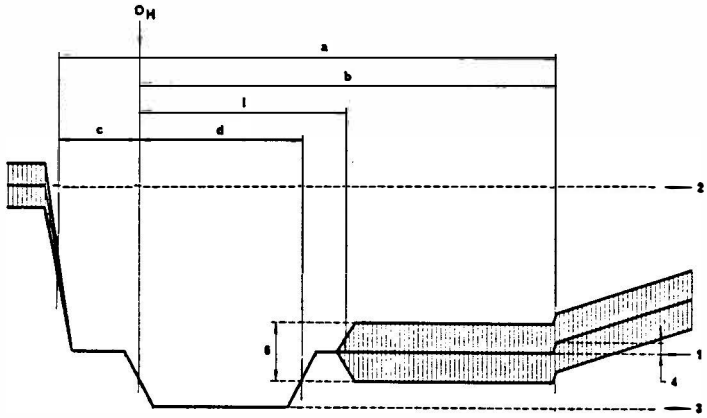

SECAM

TV system		PAL B,D,G,H,I	PAL N	PAL M	NTSC M	SECAM B,D,G,H,K,K1,L
1 blanking level	%	0	0	0	0	0
2 peak white-level	%	100	100	100	100	100
3 synchronising level	%	-43	-43	-40	-40	-43
4 difference of black and blanking levels	%	0	0	7.5±2.5	7.5±2.5	0
5 peak-to-peak value of burst	%	43 (300 mV)	43	43	40	–
tolerance of subcarrier burst	%	±10 (±3 PAL I)	±10	±10	±10	–
6 peak-to-peak value of	D'B	–	–	–	–	166 mV±20 mV
colour sub-carrier	D'R	–	–	–	–	214 mV±26 mV
a Line-blanking interval	(μs)	12±0.3	12±0.3			12±0.3
c Front porch	(μs)	1.65±0.1	1.5±0.3	1.27...2.54	1.27...2.22	1.5±0.3
d Synchronising pulse	(μs)	4.7±0.2	4.7±0.2	4.19...5.71	4.7±0.1	4.7±0.2
g Start of sub-carrier burst	(μs)	5.6±0.1	5.6±0.1	5.8±0.1	4.71...5.71	–
h Duration ob sub-carrier burst	(μs)	2.25±0.23	2.25±0.23	2.52±0.28	2.23...3.11	–
i Blanking of chrominance sub-carrier	(μs)	–	–	–	–	5.6±0.2

Fig. 28 Levels in the composite signal and details of line-synchronising signals

Symbol	Characteristics	M	N	B,G,H,I,D, K,K1,L
v	Field period (ms)	16.6833	20	20
j	Field-blanking period	21 H+a	25 H+a	25 H+a
l	Duration of first sequence of equalising pulses	3 H	2.5 H	2.5 H
m	Duration of sequence of synchronising pulses	3 H	2.5 H	2.5 H
n	Duration of second sequence of equlising pulses	3 H	2.5 H	2.5 H
p	Duration of equalising pulse (μs)	2.3 ±0.1	2.35 ±0.1	2.35 ±0.1
q	Duration of field-synchronising pulse (μs)	27.1 nominal value	27.3 nominal value	27.3 nominal value
r	Interval between field-synchronising pulses (μs)	4.7 ±0.1	4.7 ±0.1	4.7 ±0.1

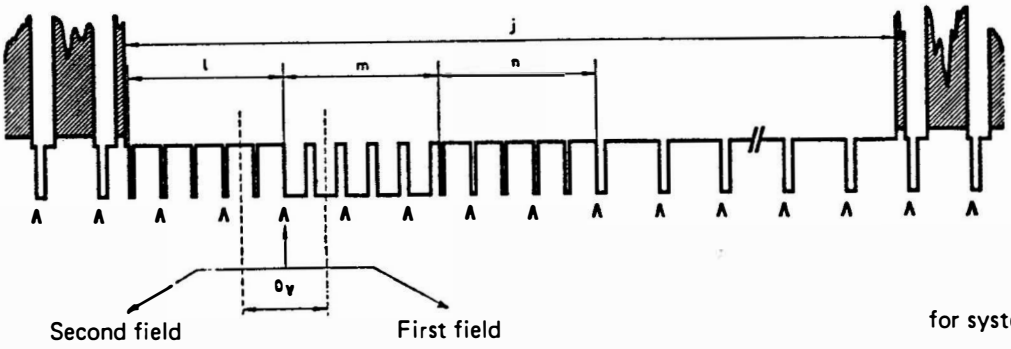

for system B,G,H,I,D K,K1,L,N

Signal at beginning of each first field

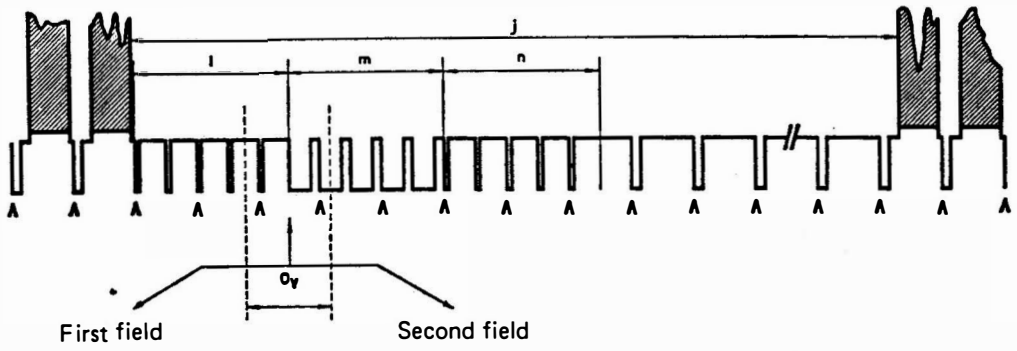

Signal at beginning of each second field

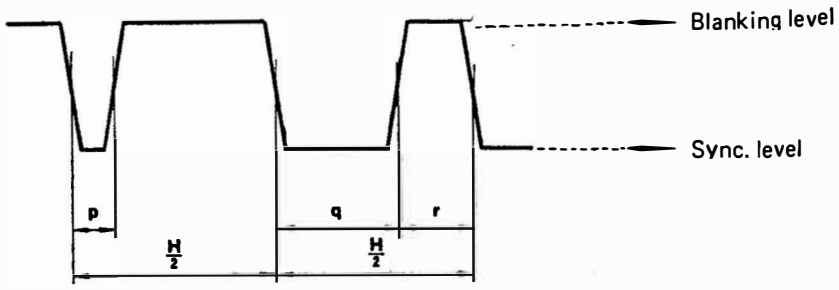

Fig. 29 Details of field-synchronising waveforms (all systems except E and M)

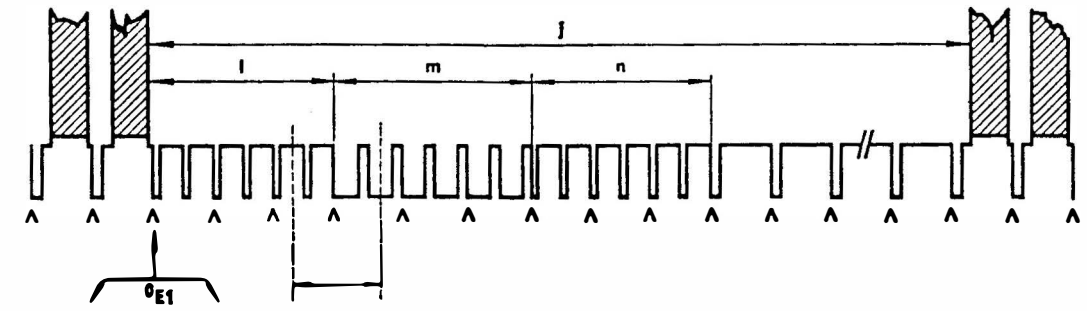

Signal at beginning of each first field

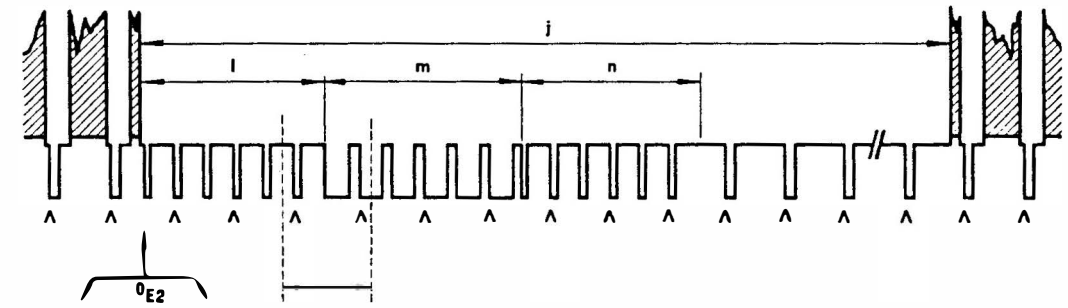

Signal at beginning of each second field

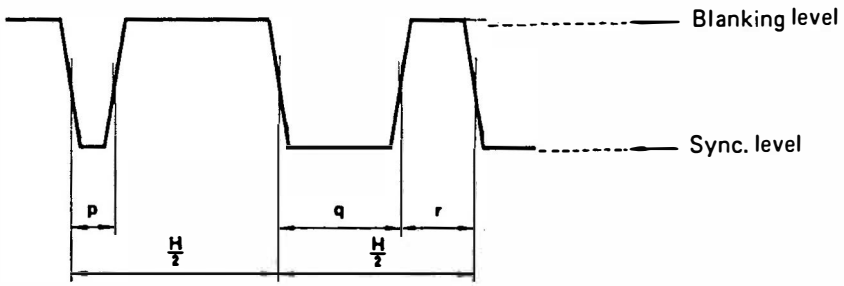

Fig. 30 Details of field-synchronising waveforms (system M)

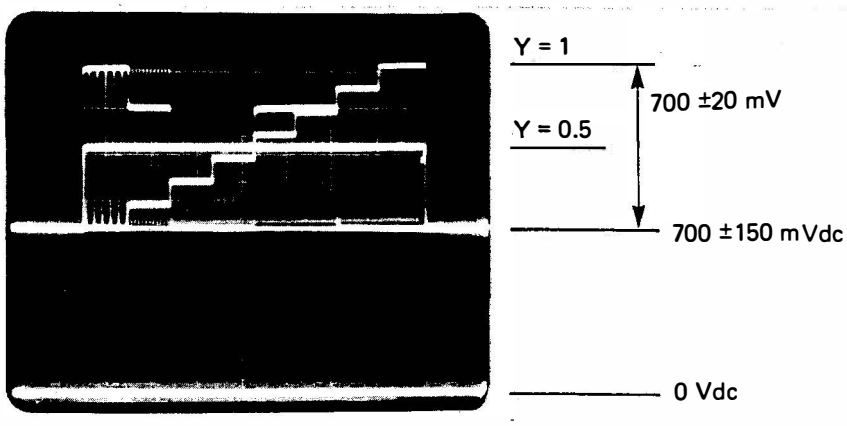

Fig. 31 Output 'RED'

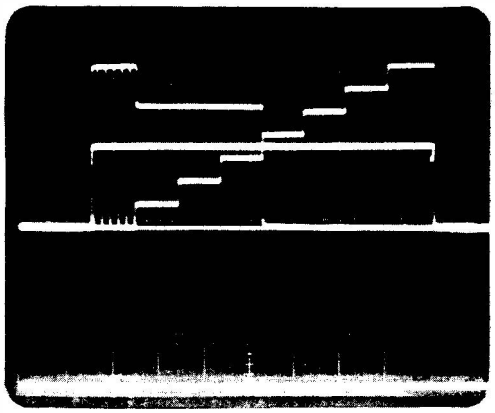

amplitudes

see fig. 31

Fig. 32 Output 'GREEN'

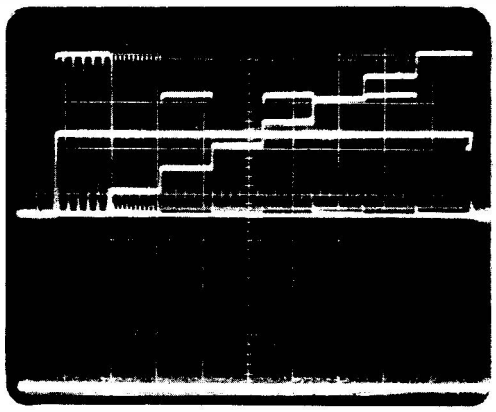

amplitudes

see fig. 31

Fig. 33 Output 'BLUE'

R–G–B outputs,
Patterns: Greyscale, Colour bar, Multiburst, DEM (PAL)

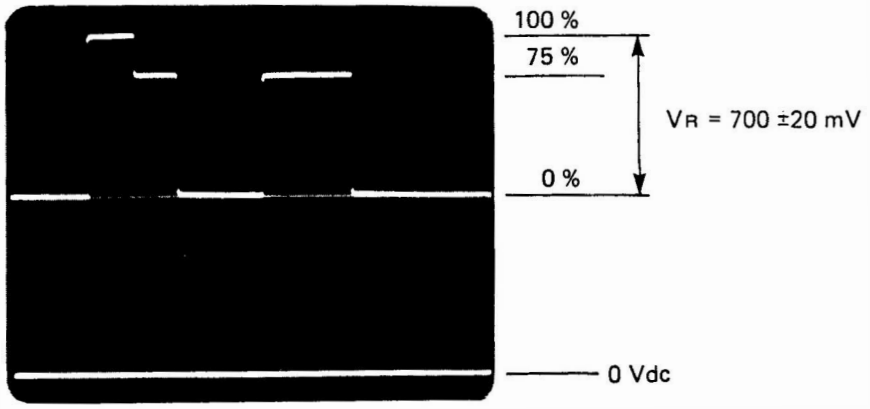

Fig. 34 Output 'RED'

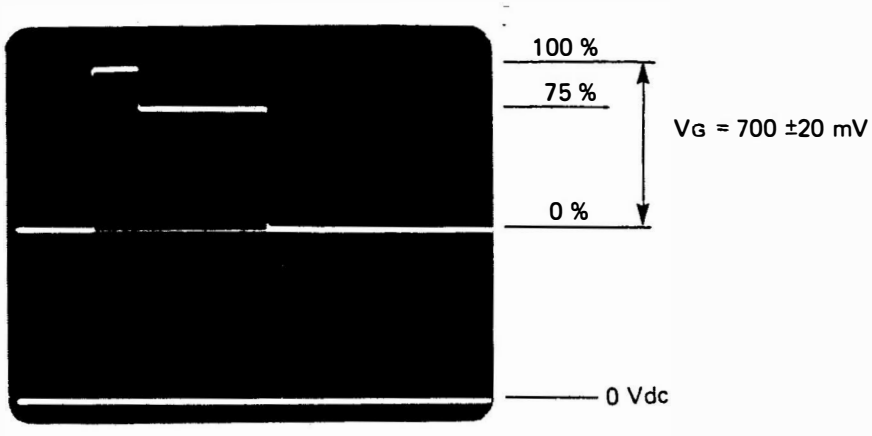

Fig. 35 Output 'GREEN'

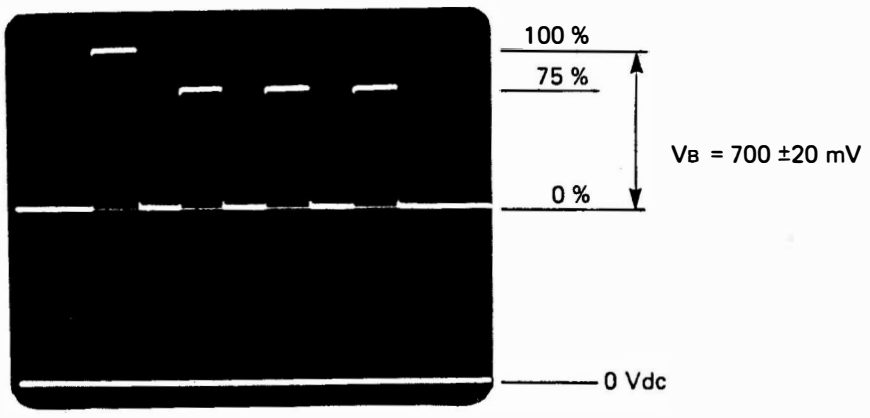

Fig. 36 Output 'BLUE'

R–G–B outputs,
Pattern: Colour bar, PAL (not PAL I)

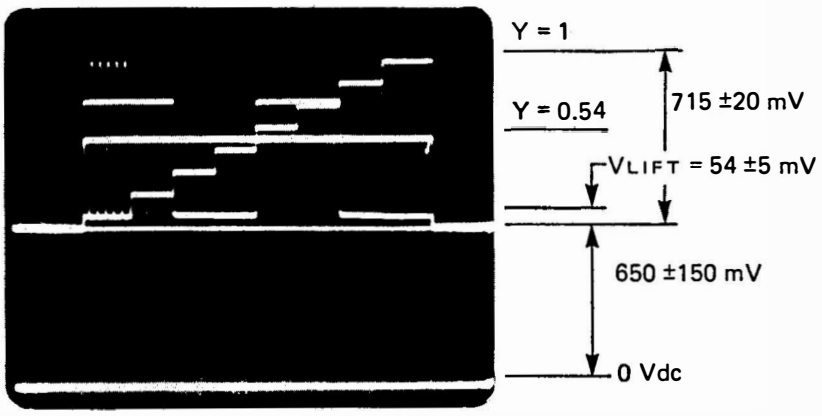

Fig. 37 Output 'RED'

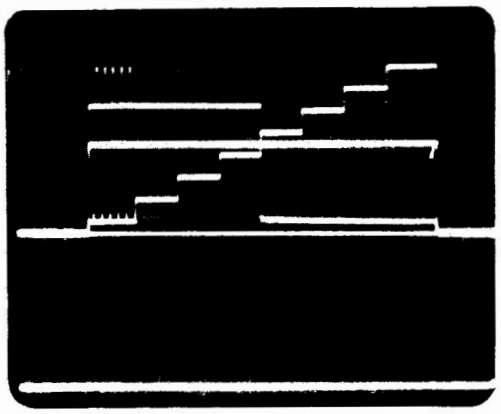

amplitudes
see fig. 37

Fig. 38 Output 'GREEN'

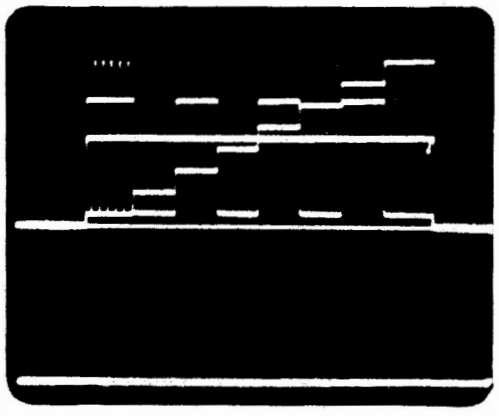

amplitudes
see fig. 37

Fig. 39 Output 'BLUE'

R–G–B outputs,
Patterns: Greyscale, Colour bar, Multiburst, DEM (NTSC)

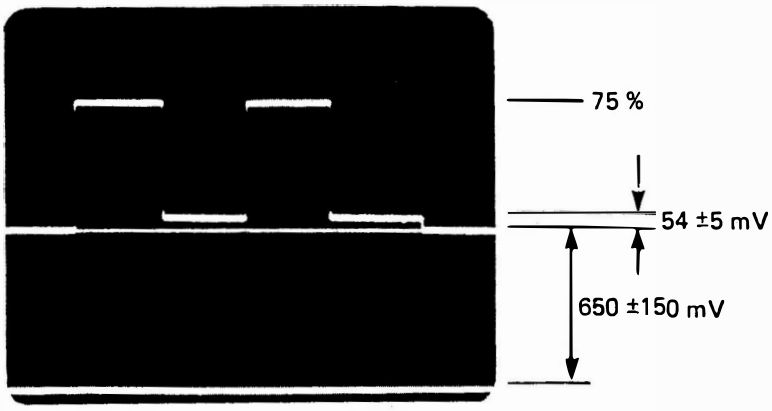

Fig. 40 Output 'RED'

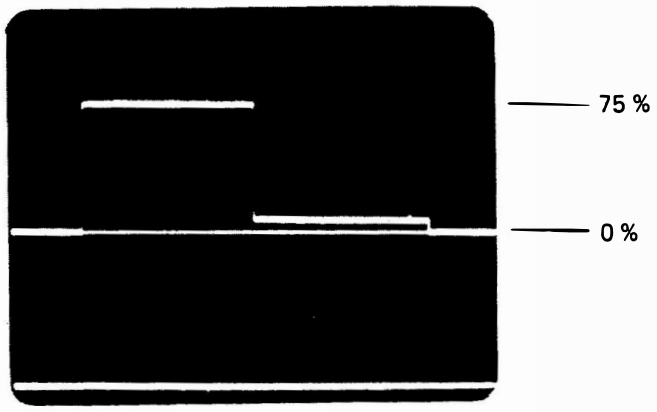

Fig. 41 Output 'GREEN'

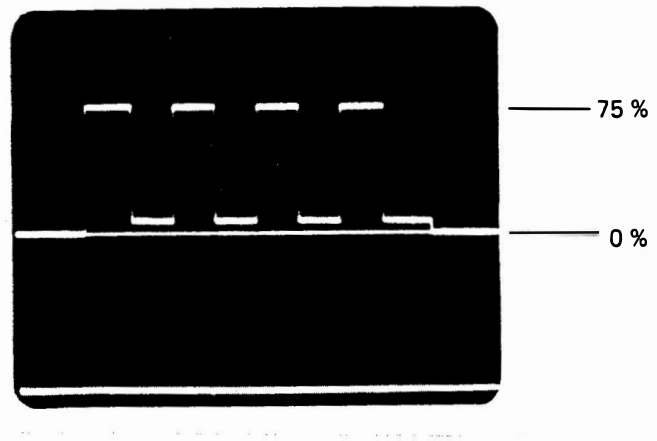

Fig. 42 Output 'BLUE'

R–G–B outputs,
Pattern: Colour bar (PAL M/NTSC)

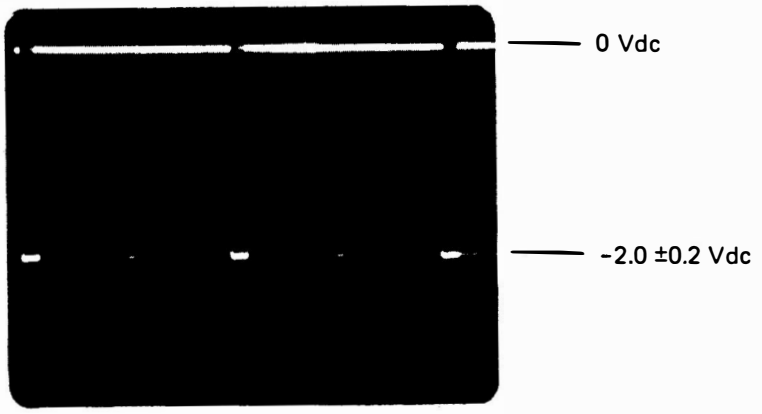

Fig. 43 R–G–B, OUTPUT SYNC

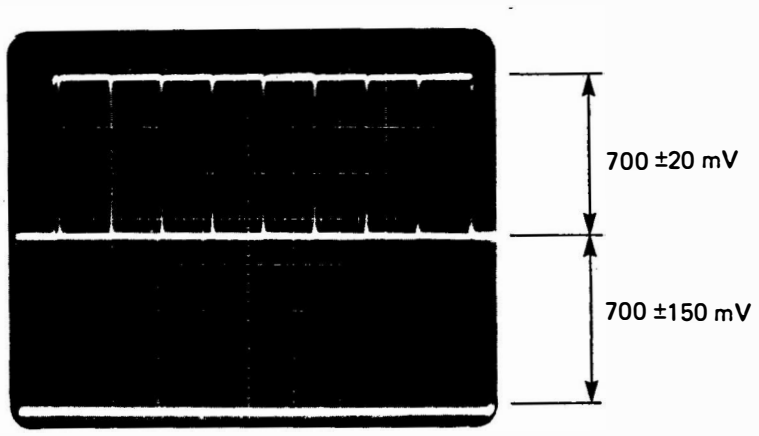

Fig. 44 R–G–B outputs 'RED, GREEN, BLUE'
Pattern: Crosshatch (PAL/SECAM, not system M)

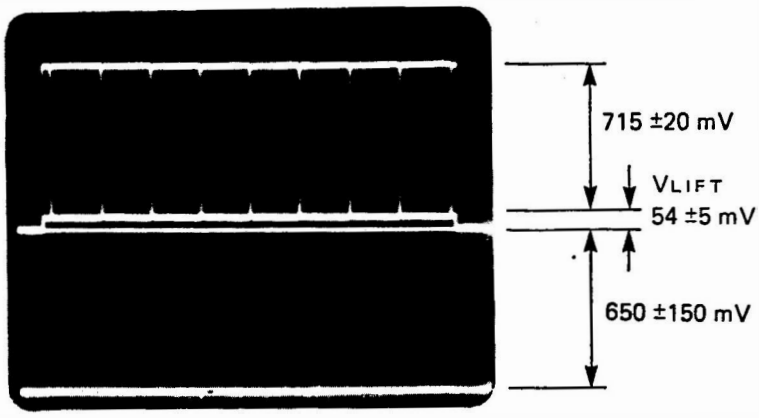

Fig. 45 R–G–B outputs 'RED, GREEN, BLUE'
Pattern: Crosshatch (PAL M/NTSC)

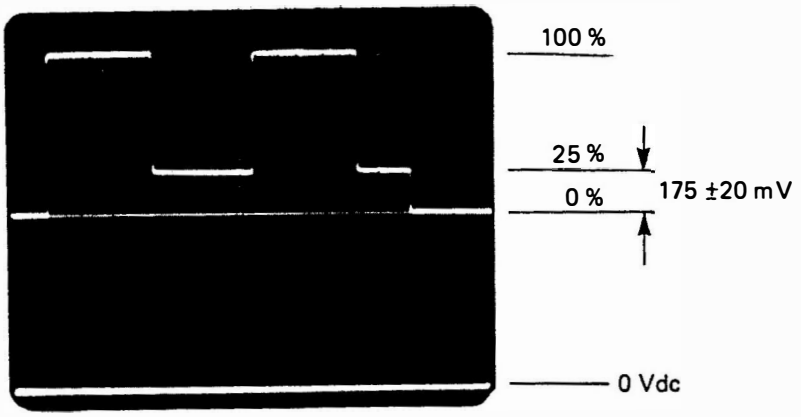

Fig. 46 Output 'RED'

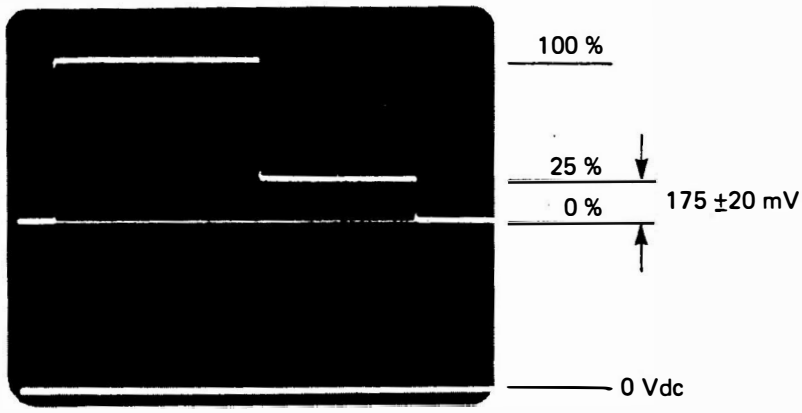

Fig. 47 Output 'GREEN'

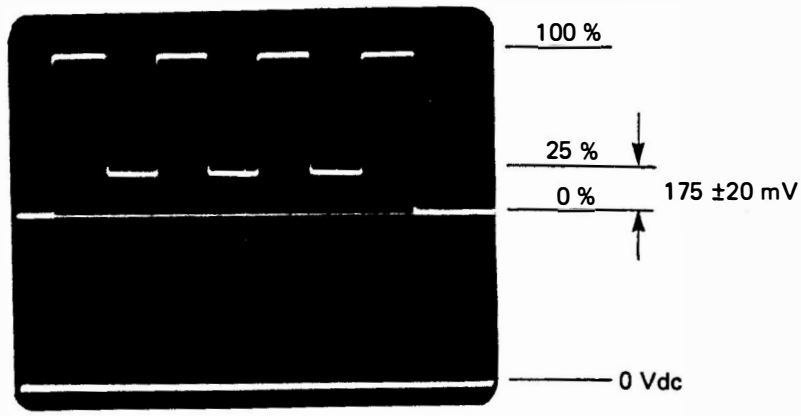

Fig. 48 Output 'BLUE'

R–G–B outputs,
Pattern: Colour bar (PAL I)

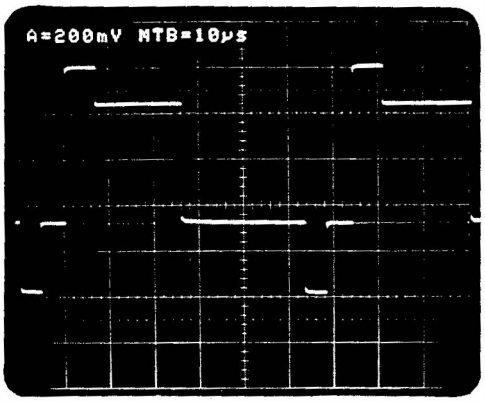

Fig. 49 Sync in GREEN
TV systems PAL D,G,I,N
Colour bar

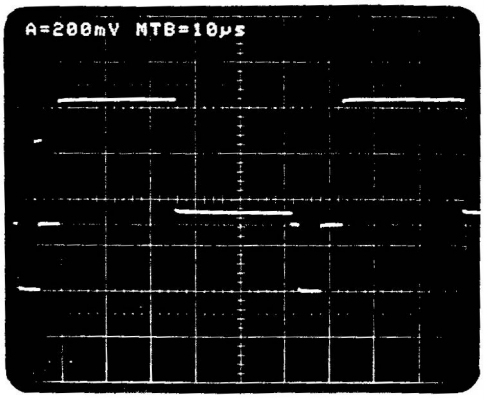

Fig. 50 Sync in GREEN
TV systems NTSC, PAL M
Colour bar

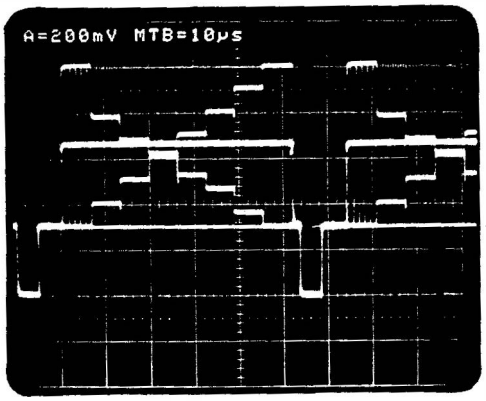

Fig. 51 Y-signal PAL D,G,I,N

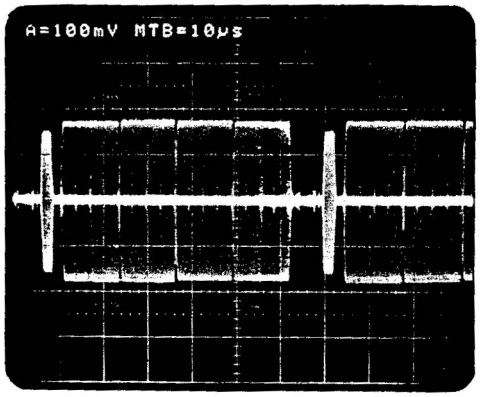

Fig. 52 Chroma signal PAL D,G,I,N

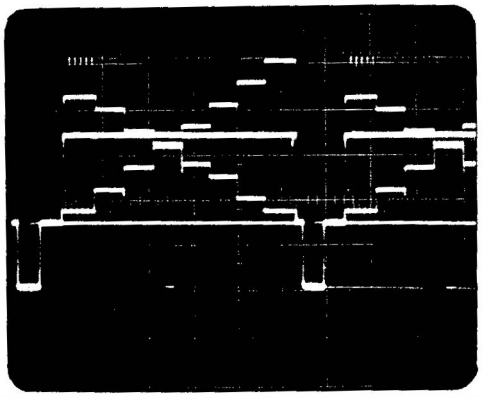

Fig. 53 Y-signal PAL M, NTSC

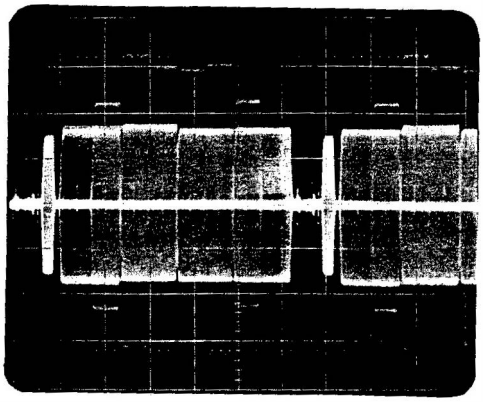

Fig. 54 Chroma signal PAL M, NTSC

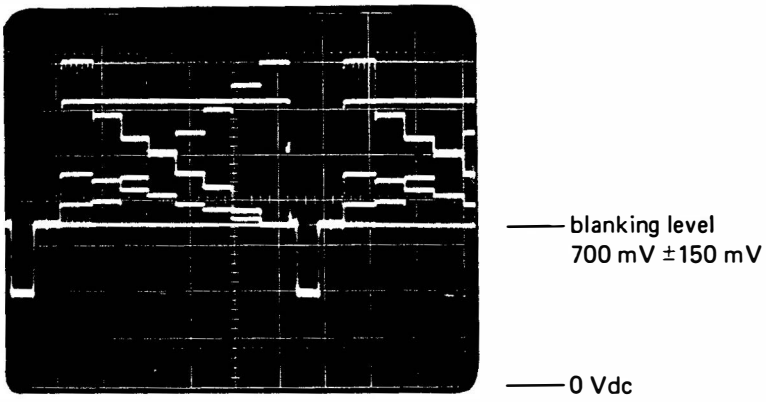

Fig. 55 Y-signal SECAM

Fig. 51 to 55 show the combined pattern: Greyscale, Colour bar, Multiburst and DEM

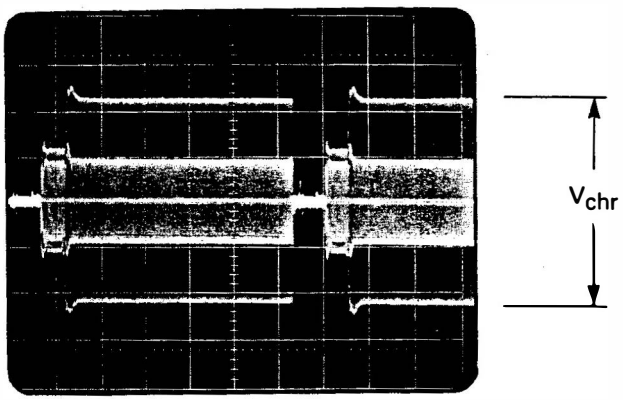

Fig. 56 Chroma signal SECAM pattern purity cyan

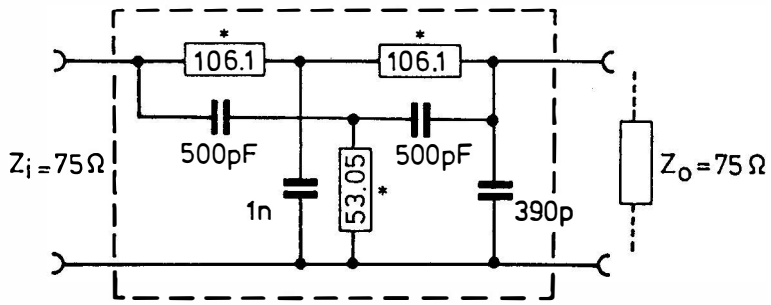

* to be adjusted

Fig. 57 Notch filter 3 MHz

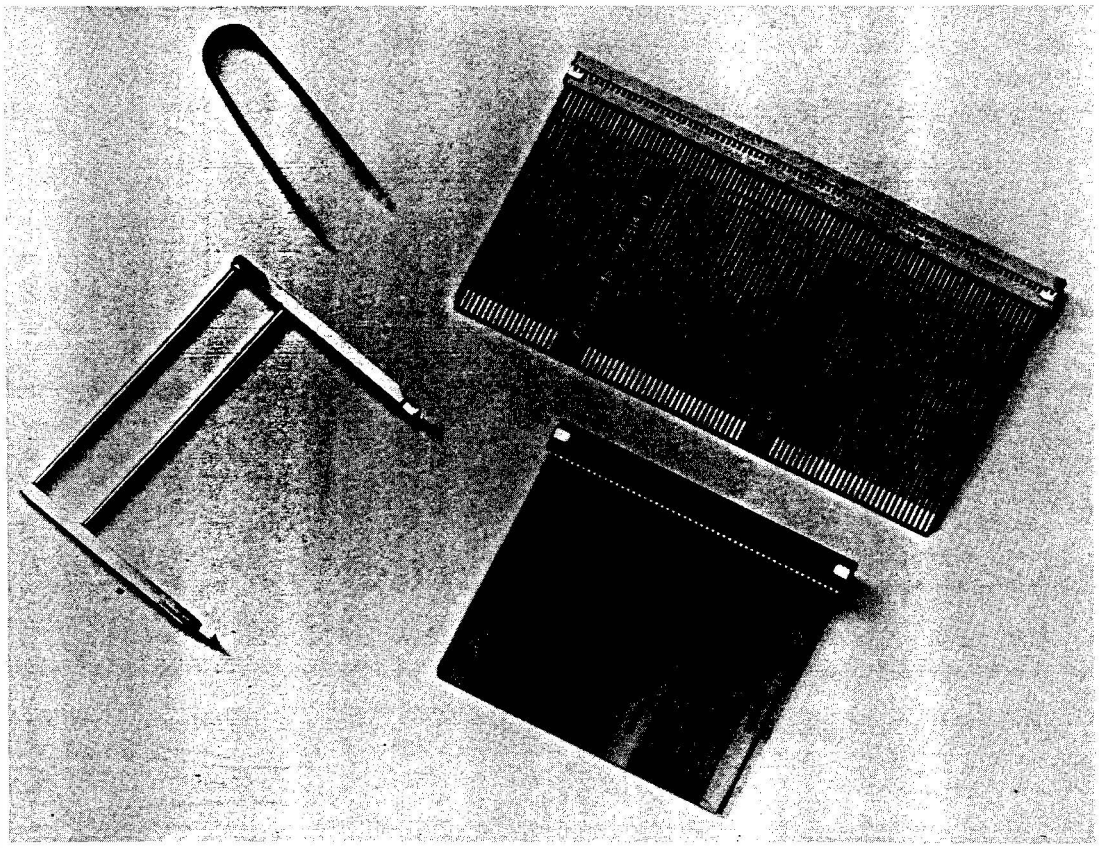

Fig. 58 Service kit

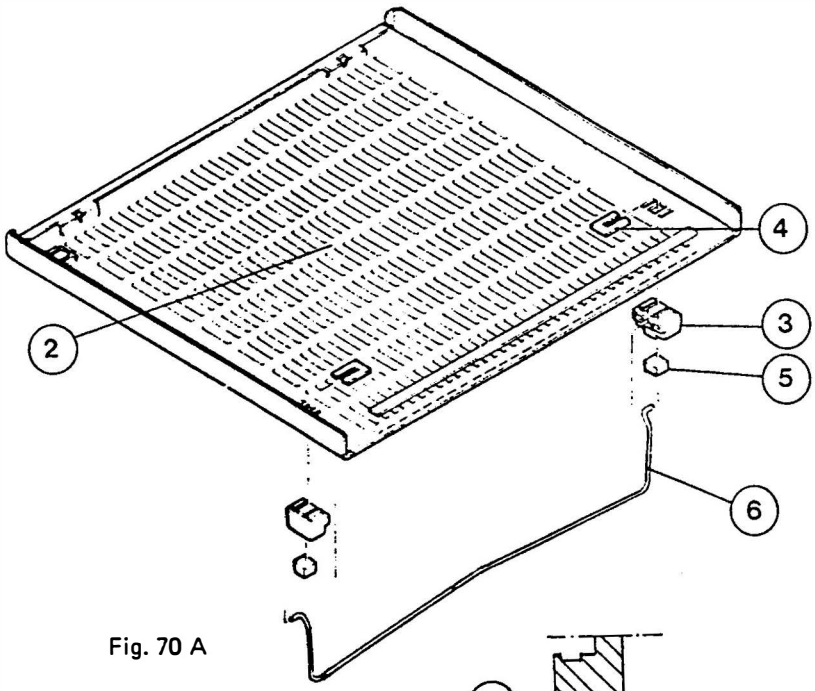

Fig. 70 A

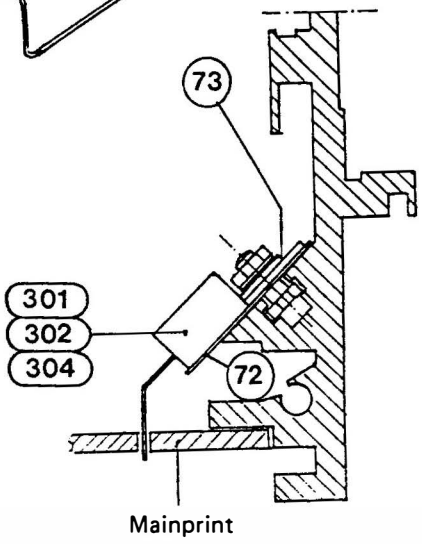

Fig. 70 B

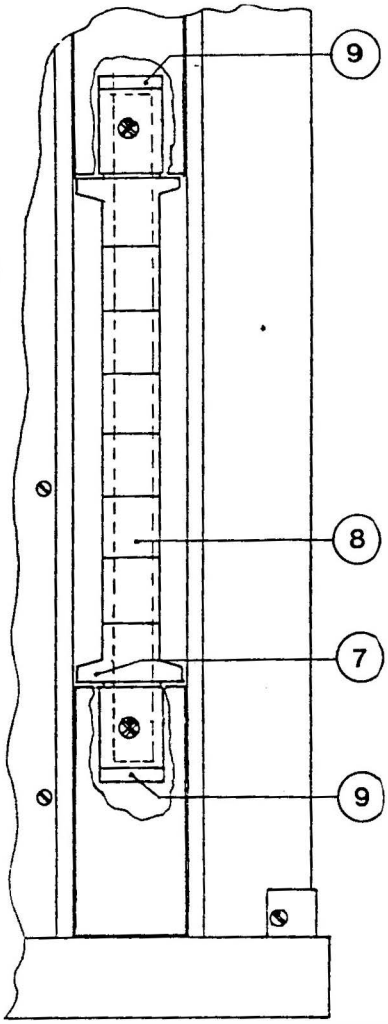

Fig. 70 C

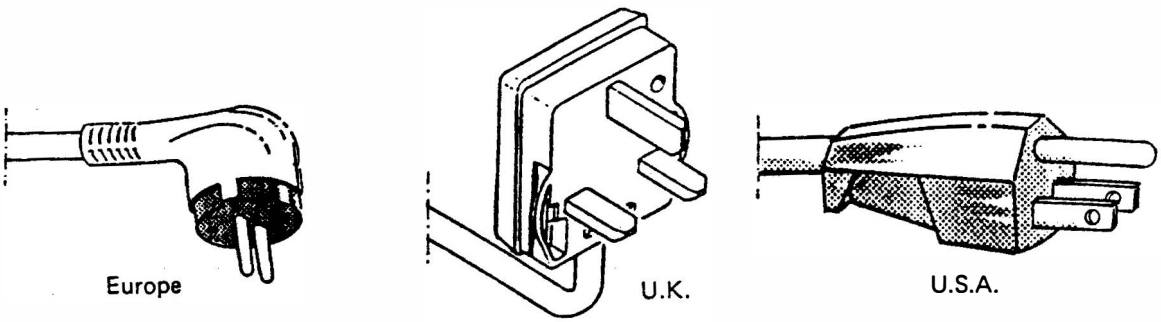

Fig. 70 D

Fig. 70 Spare parts: mechanical parts, mains cable

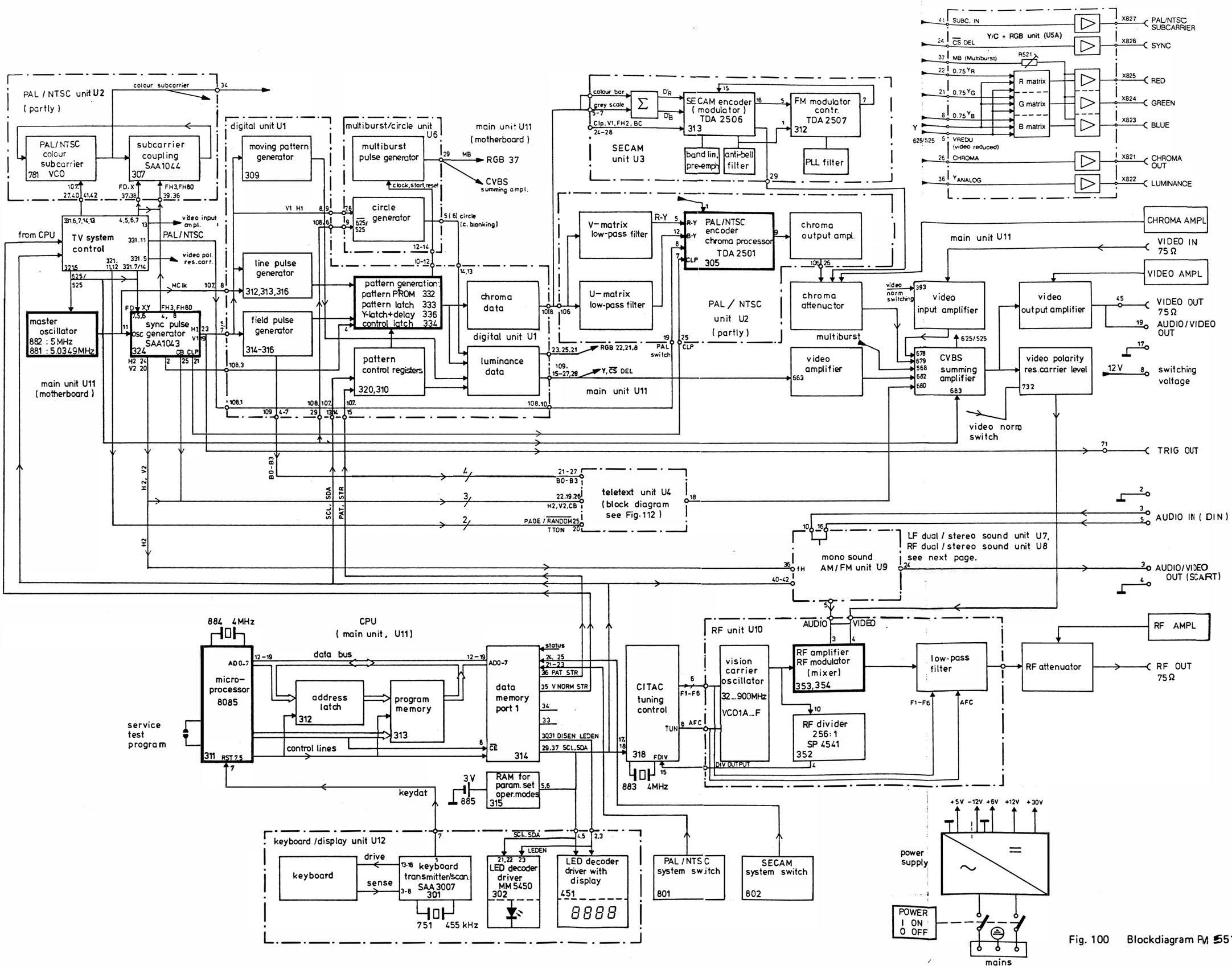

Fig. 100 Blockdiagram PM 5518

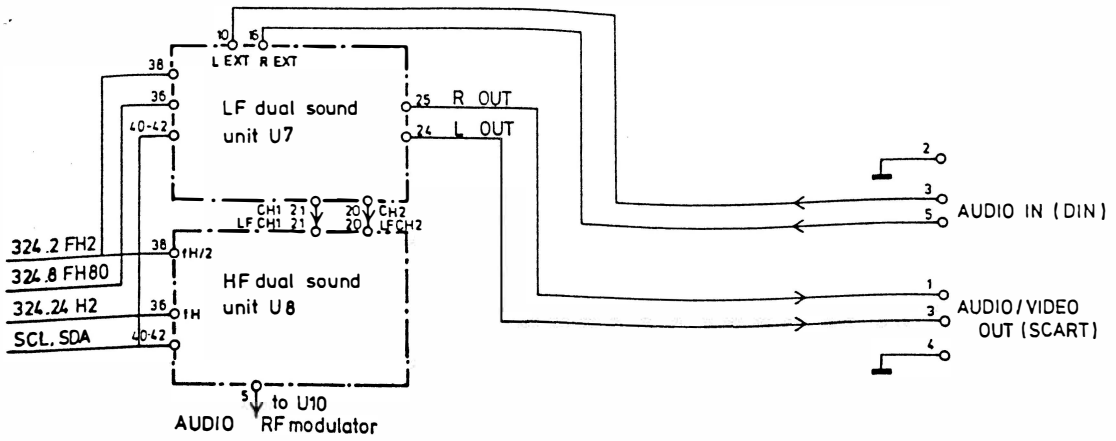

Fig. 101 –X/–TX: Second sound/stereo sound: connection diagram

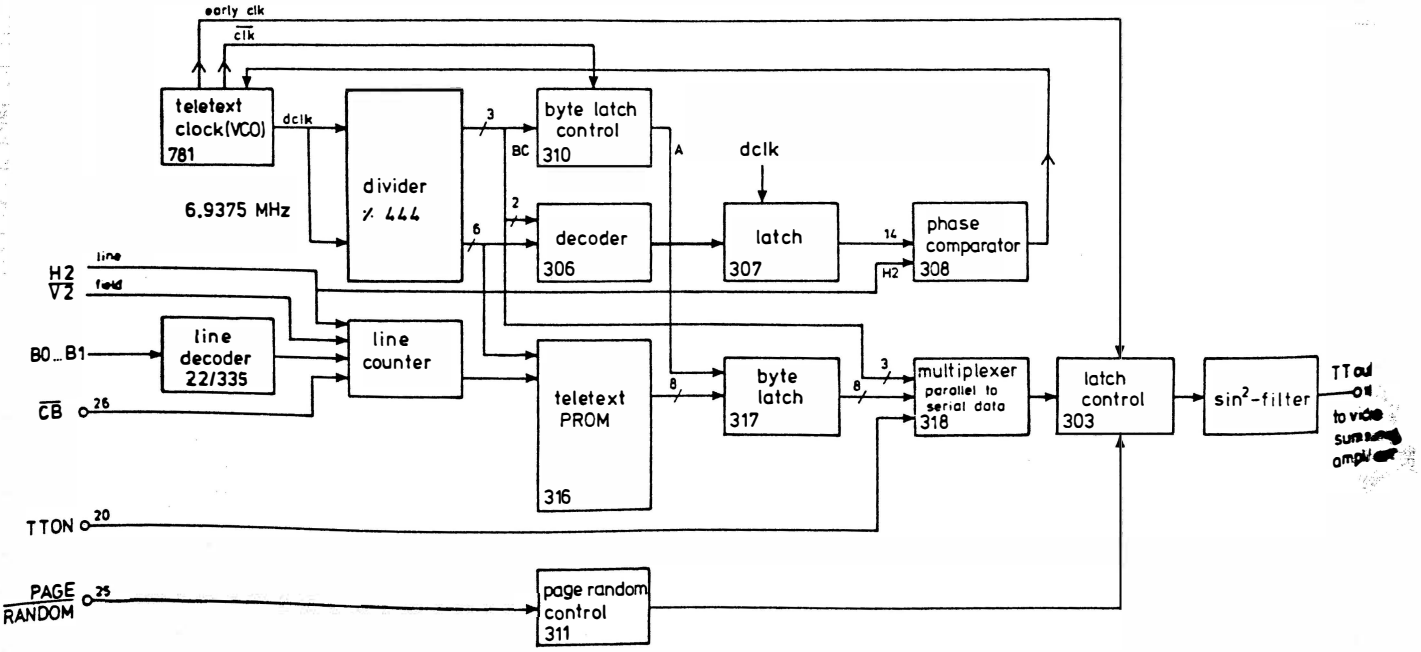

Fig. 102 –T/–TX: Teletext block diagram

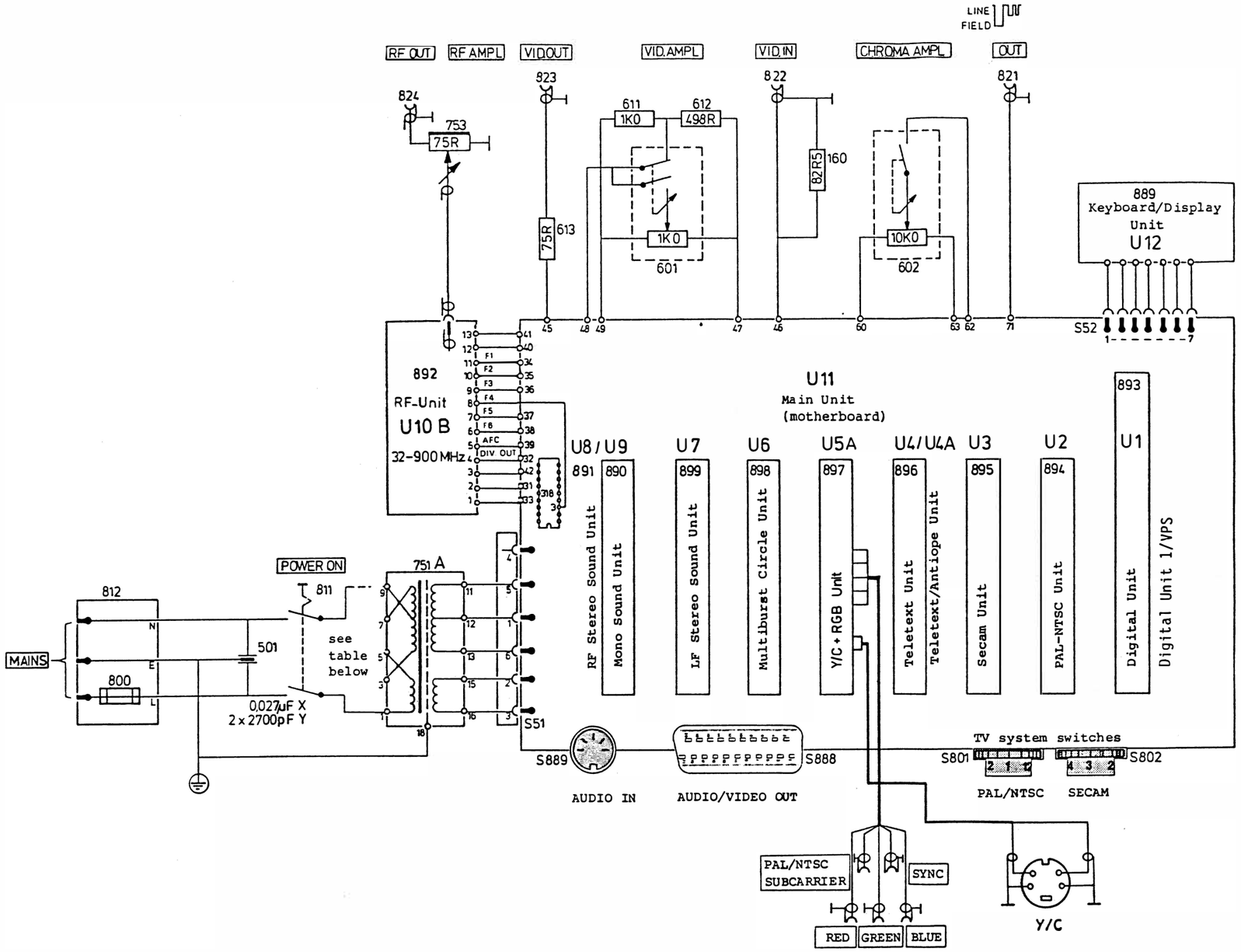

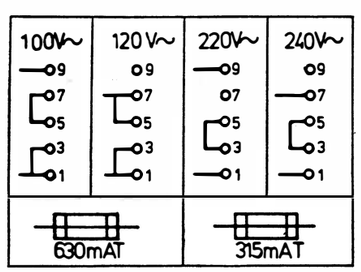

Units on Main Print

		Digital Unit, U1	Digital Unit 1/VPS	PAL-NTSC Unit, U2	SECAM Unit, U3	Teletext Unit, U4	Teletext/Antiope, U4A	Y/C + RGB, U5A	Multiburst/Circle, U6	LF Stereo Sound, U7	RF Stereo Sound, U8	Mono Sound, U9
PM 5515	D	x		x					x			x
	B.G.H	x		x					x			x
	I	x		x					x			x
	M	x		x					x			x
	N	x		x					x			x
	MM	x		x					x			x
PM 5515	D, Y/C + RGB	x		x				x	x			x
	B.G.H, Y/C + RGB	x		x				x	x			x
	I, Y/C + RGB	x		x				x	x			x
	M, Y/C + RGB	x		x				x	x			x
	N, Y/C + RGB	x		x				x	x			x
	MM, Y/C + RGB	x		x				x	x			x
PM 5515	GT	x		x		x			x			x
	IT	x		x		x			x			x
	GX	x		x		-			x	x	x	
	GTX	x		x		x			x	x	x	
	TXS		x	x		x			x	x	x	
PM 5515	GT, Y/C + RGB	x		x		x		x	x			x
	IT, Y/C + RGB	x		x		x		x	x			x
	GX, Y/C + RGB	x		x		-		x	x	x	x	
	GTX, Y/C + RGB	x		x		x		x	x	x	x	
	TXS, Y/C + RGB		x	x		x		x	x	x	x	
PM 5516		x		-	x				x			x
PM 5516	T	x		-	x		x		x			x
PM 5516	Y/C + RGB	x		-	x			x	x			x
PM 5516	T, Y/C + RGB	x		-	x		x	x	x			x
PM 5518		x		x	x				x			x
PM 5518	GTX	x		x	x		x		x	x	x	
	TXS		x	x	x		x		x	x	x	
PM 5518	Y/C + RGB	x		x	x			x	x			x
PM 5518	GTX, Y/C + RGB	x		x	x		x	x	x	x	x	
	TXS, Y/C + RGB		x	x	x		x	x	x	x	x	

Fig. 103 Overall circuit diagram, survey of units and versions

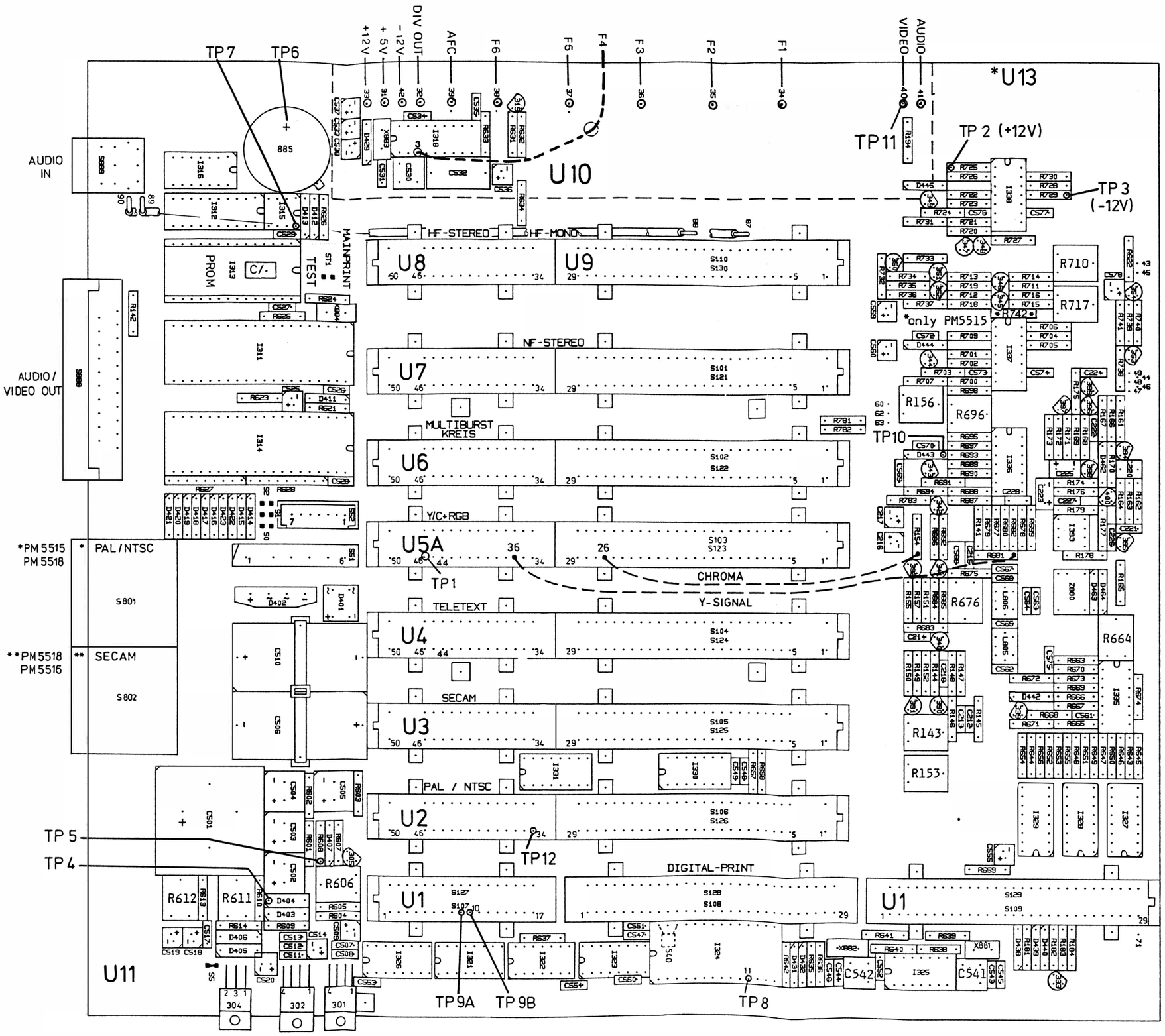

Fig. 104 Unit 11: Motherboard

PM 5515...
* only for PM 5518
PM 5518.TX

MASTER OSCILLATOR

NTSC

PAL

SYNC PULSE GENERATOR
SAA1043

TV SYSTEM CONTROL

DIGITAL - PRINT U1

AUDIO IN

AUDIO/VIDEO OUT

U2 PAL/NTSC

U3 SECAM

U7 LF STEREO SOUND

U8 (U9) RF STEREO (MONO SOUND)

U4 (U4A) TELETEXT

U6 MULTIBURST / CIRCLE

U5A Y/C & RGB

LUMINANCE SUMMING PT.

CHROMA

Video pre-ampl 393/6

Video ampl 732

Video ampl 393/5

Chroma ampl 153

Chroma ampl 143

Video ampl 683

Video ampl 663

Video ampl 680

Video ampl 568

Video ampl 686 692

CPU 314/35 V NORM STR

CPU 314/36 PAT STR

CPU 314/27 314/26 E

CPU 314/34

CPU 314/28

CPU 314/29 SCL SDA 314/37

CPU 801 PAL/NTSC STAT

CPU 802 SECAM STAT

CPU 314/33 314/37 314/29 SDA SCL

TRIG OUT

HF-MODUL

Y (analog)

CHROMA

C 154/R215

R 681/682

V_{DD} 327,328,329

SUPPLY-VOLTAGE				
POS.NR.	TYPE	PIN NR.		
		GND	V_{DD}+5V	V_{DD}+6V
321	HEF4049BP	8	16	28
322	HEF4011BP	7	14	
323	HEF4050BP	8	16	
324	SAA1043P	14		
325	HEF4011UBP	7	14	
326	MM74HC4049	8	16	
327	HC4050	8	16	
328	HC4050	8	16	
329	MM74HC4050	8	16	
331	HEF4094BP	8	16	

Fig. 105 Unit 11: Motherboard, part 1: master oscillator, sync pulse generator, connections with other uni

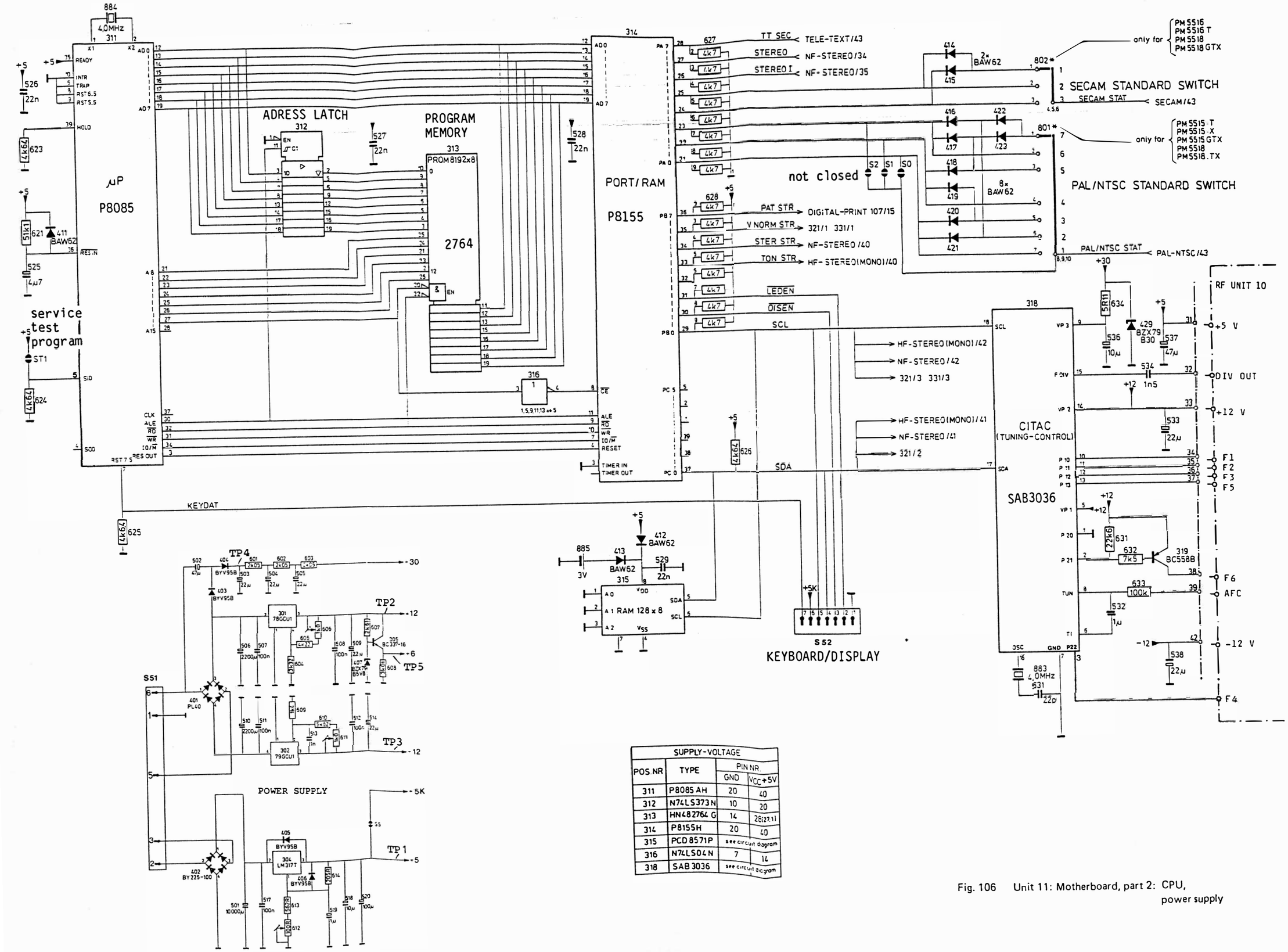

SUPPLY-VOLTAGE			
POS.NR	TYPE	PIN NR. GND	PIN NR. VCC+5V
311	P8085 AH	20	40
312	N74LS373N	10	20
313	HN482764 G	14	28(27.1)
314	P8155H	20	40
315	PCD8571P	see circuit diagram	
316	N74LS04N	7	14
318	SAB3036	see circuit diagram	

Fig. 106 Unit 11: Motherboard, part 2: CPU, power supply

Video pre-amplifier

VIDEO IN

PAL-NTSC/26

SECAM/29

CHROMA AMPL

VIDEO AMPL

AUDIO/VIDEO OUT

VIDEO OUT

CHROMA

UNIT 5A Y/C&RGB /26 /36

Y(analog)

Video amplifier

TELE-TEXT/18

KREIS/MULTIBURST/29

RGB/5

643...656

323/15

331/5

TP10

TP11

*only PM5515

This part of video amplifier not in PM 5515; circuits not mounted; *signal path instead:

RF-MODULE MOD INPUT VIDEO

RF-MODULE MOD INPUT VIDEO

Fig. 107 Unit 11: Motherboard, part 3: chroma attenuator, video amplifiers

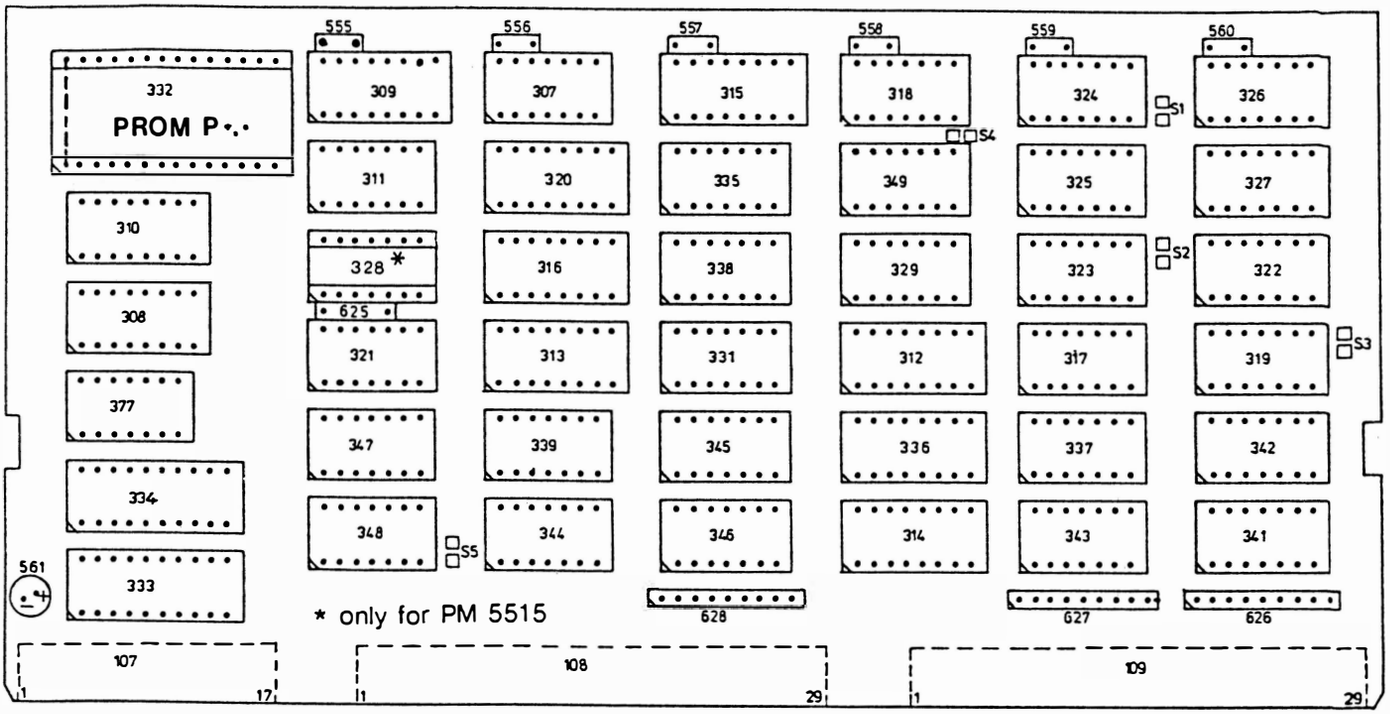

Fig. 108 Unit 1: digital unit

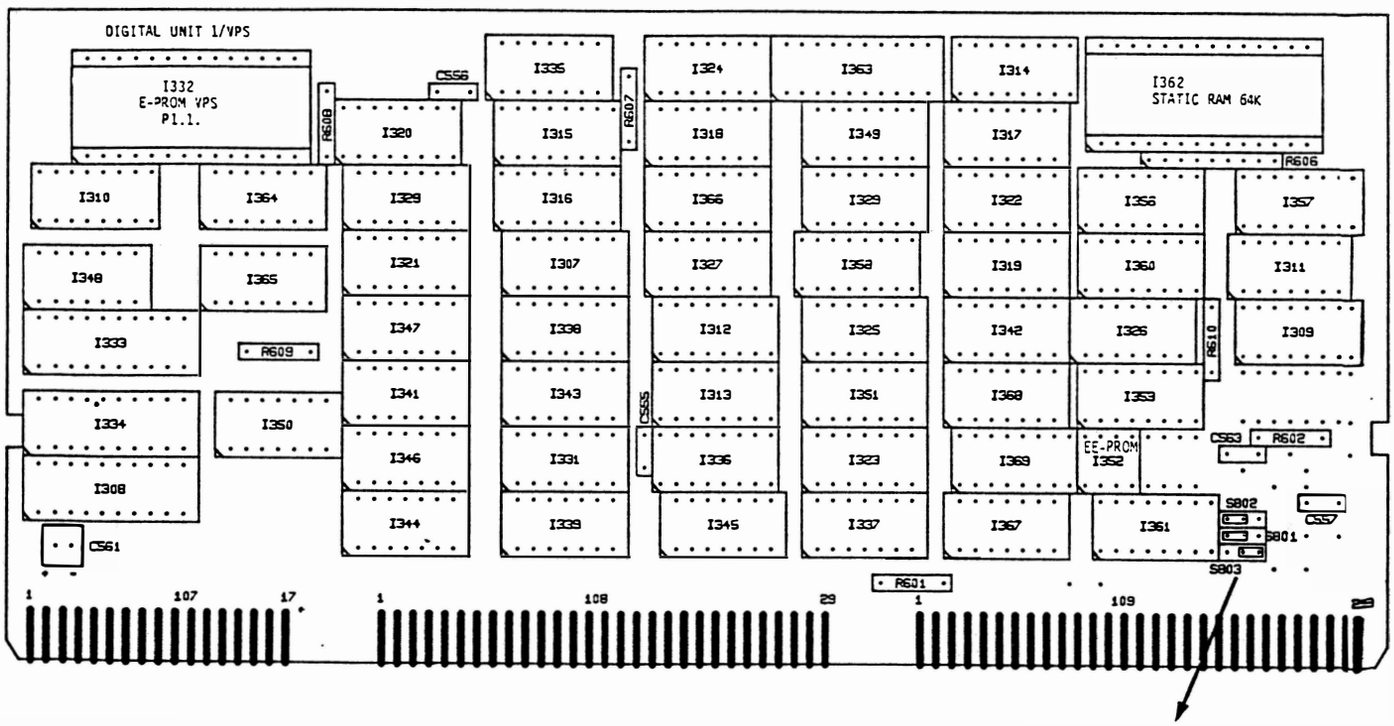

Attention: 6-multilayer pcb!
for desoldering of components
qualified tools must be used

* see adjustment table
8.4. chapter 2.2

jumper on PCB

OFF	ON	S 802
(INV)*	INV	S 801
WL	BL	S 803

Fig. 108A Unit 1 – VPS: digital unit/VPS

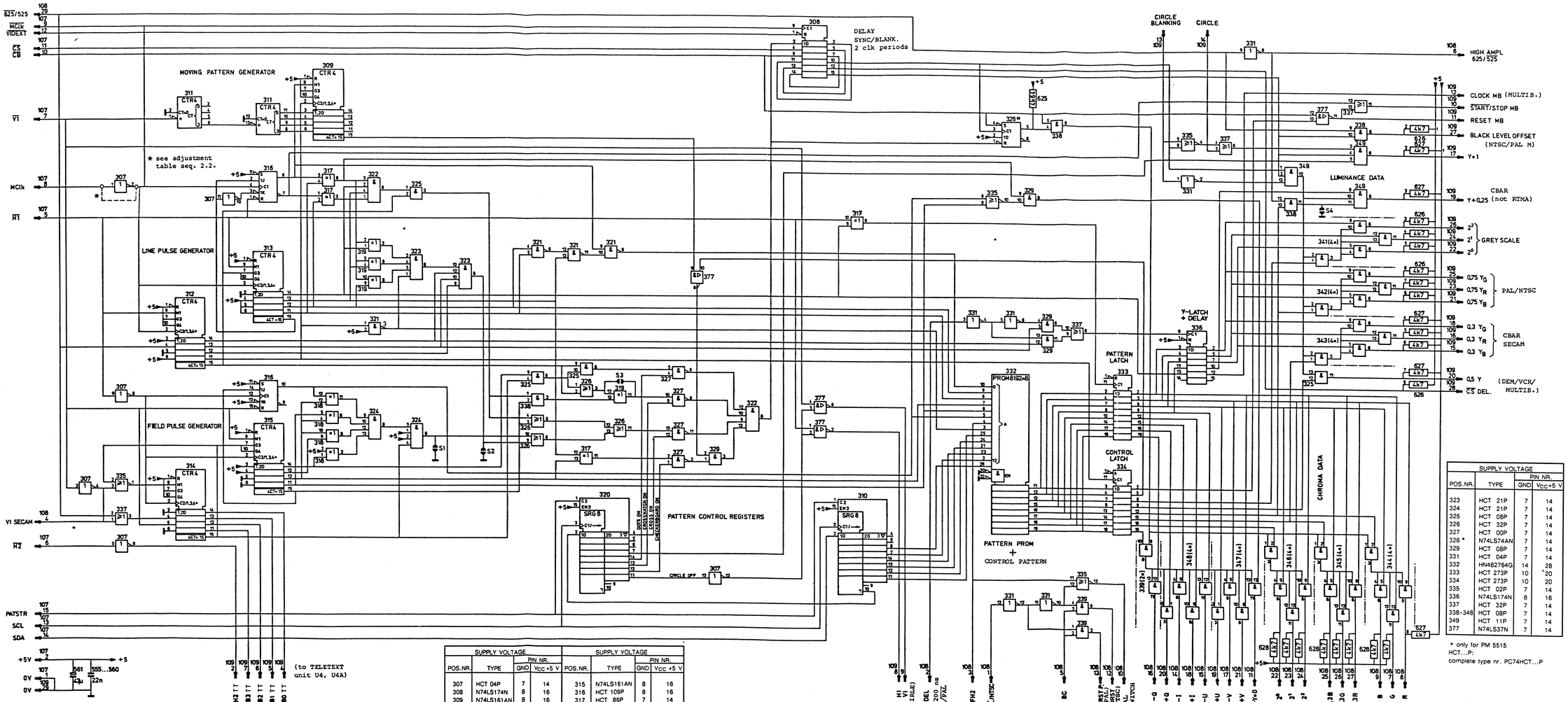

SUPPLY VOLTAGE		PIN NR.	
POS.NR.	TYPE	GND	Vcc +5 V
307	HCT 04P	7	14
308	N74LS174N	8	16
309	N74LS161AN	8	16
310	HEF4094BP	8	16
311	HCT 393P	7	14
312	N74LS161AN	8	16
313	N74LS161AN	8	16
314	N74LS161AN	8	16

SUPPLY VOLTAGE		PIN NR.	
POS.NR.	TYPE	GND	Vcc +5 V
315	N74LS161AN	8	16
316	HCT 109P	8	16
317	HCT 86P	7	14
318	HCT 86P	7	14
319	HCT 86P	7	14
320	HEF4094BP	8	16
321	HCT 00P	7	14
322	HCT 21P	7	14

HCT...P:
complete type nr. PC74HCT...P

SUPPLY VOLTAGE		PIN NR.	
POS.NR.	TYPE	GND	Vcc +5 V
323	HCT 21P	7	14
324	HCT 21P	7	14
325	HCT 08P	7	14
326	HCT 32P	7	14
327	HCT 00P	7	14
328 *	N74LS74AN	7	14
329	HCT 08P	7	14
331	HCT 04P	7	14
332	HN482764G	14	28
333	HCT 273P	10	20
334	HCT 273P	10	20
335	HCT 02P	7	14
336	N74LS174N	8	16
337	HCT 32P	7	14
338-348	HCT 08P	7	14
349	HCT 11P	7	14
377	N74LS37N	7	14

* only for PM 5515
HCT...P:
complete type nr. PC74HCT...P

Fig. 109 Unit 1: digital unit

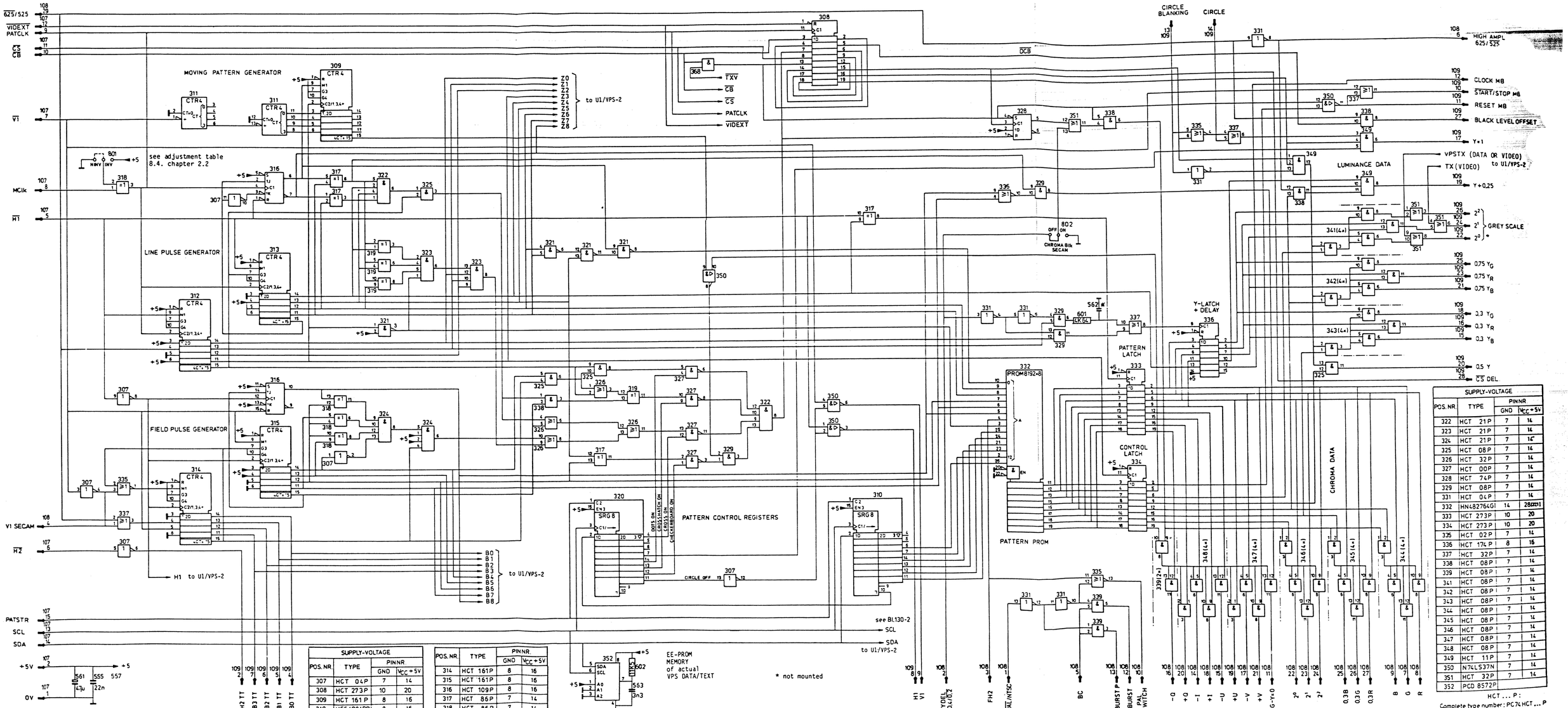

SUPPLY-VOLTAGE			
POS. NR.	TYPE	PINNR GND	PINNR V_{CC} +5V
307	HCT 04P	7	14
308	HCT 273P	10	20
309	HCT 161P	8	16
310	HEF4094BP	8	16
311	HCT 393P	7	14
312	HCT 161P	8	16
313	HCT 161P	8	16

POS. NR.	TYPE	PINNR GND	PINNR V_{CC} +5V
314	HCT 161P	8	16
315	HCT 161P	8	16
316	HCT 109P	8	16
317	HCT 86P	7	14
318	HCT 86P	7	14
319	HCT 86P	7	14
320	HEF4094BP	8	16
321	HCT 00P	7	14

SUPPLY-VOLTAGE			
POS. NR.	TYPE	PINNR GND	PINNR V_{CC} +5V
322	HCT 21P	7	14
323	HCT 21P	7	14
324	HCT 21P	7	14
325	HCT 08P	7	14
326	HCT 32P	7	14
327	HCT 00P	7	14
328	HCT 74P	7	14
329	HCT 08P	7	14
331	HCT 04P	7	14
332	HN482764G	14	28
333	HCT 273P	10	20
334	HCT 273P	10	20
335	HCT 02P	7	14
336	HCT 174P	8	16
337	HCT 32P	7	14
338	HCT 08P	7	14
339	HCT 08P	7	14
341	HCT 08P	7	14
342	HCT 08P	7	14
343	HCT 08P	7	14
344	HCT 08P	7	14
345	HCT 08P	7	14
346	HCT 08P	7	14
347	HCT 08P	7	14
348	HCT 08P	7	14
349	HCT 11P	7	14
350	N74LS37N	7	14
351	HCT 32P	7	14
352	PCD 8572P		

HCT ... P :
Complete type number: PC74 HCT ... P

Fig. 109A Unit 1: digital unit/VPS, part 1

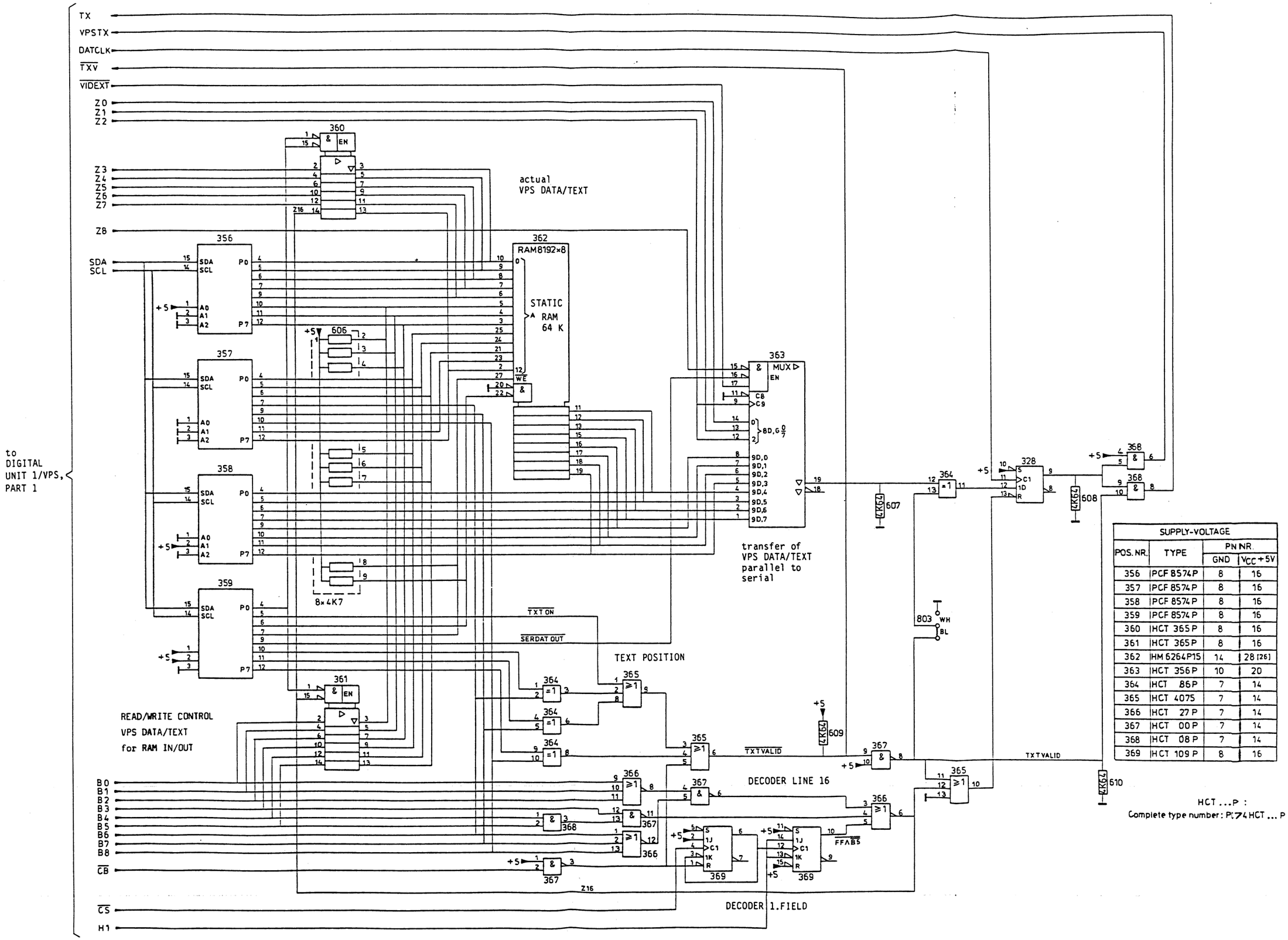

SUPPLY-VOLTAGE			
POS. NR.	TYPE	PIN NR. GND	PIN NR. V_{CC} +5V
356	PCF 8574P	8	16
357	PCF 8574P	8	16
358	PCF 8574P	8	16
359	PCF 8574P	8	16
360	HCT 365P	8	16
361	HCT 365P	8	16
362	HM 6264P15	14	28 [26]
363	HCT 356P	10	20
364	HCT 86P	7	14
365	HCT 4075	7	14
366	HCT 27P	7	14
367	HCT 00P	7	14
368	HCT 08P	7	14
369	HCT 109P	8	16

HCT ...P :
Complete type number: P[7]4HCT ... P

Fig. 109B Unit 1-VPS: digital unit/VPS part 2

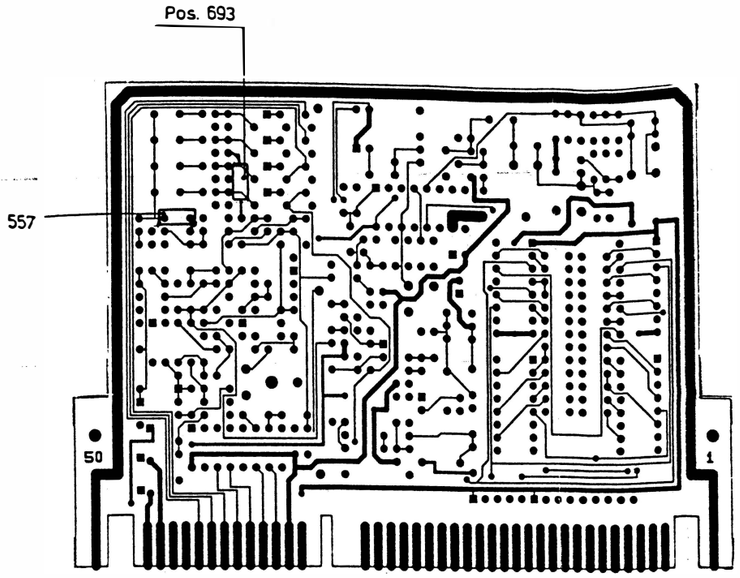

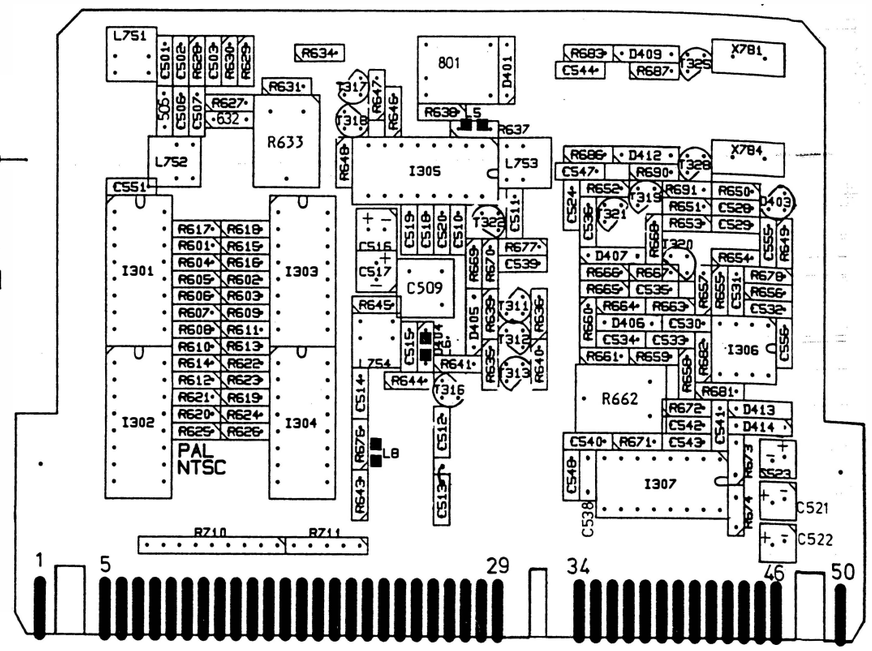

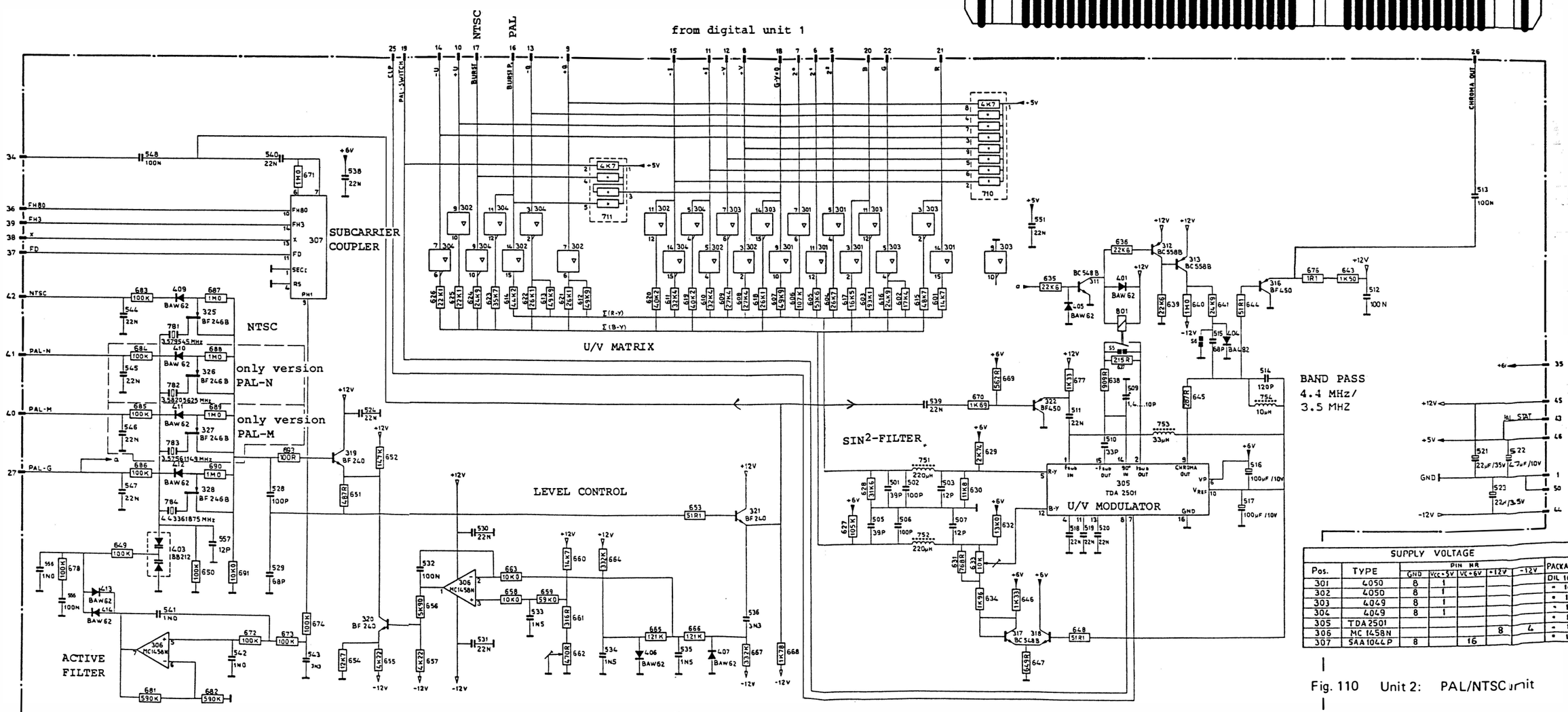

SUPPLY VOLTAGE								
Pos.	TYPE	PIN NR						PACKAGE
		GND	Vcc+5V	VC+6V	+12V	-12V		
301	4050	8	1					DIL 16
302	4050	8	1					" 16
303	4049	8	1					" 16
304	4049	8	1					" 16
305	TDA 2501							" 16
306	MC 1458N				8	4		" 8
307	SAA1044P	8		16				" 16

Fig. 110 Unit 2: PAL/NTSC unit

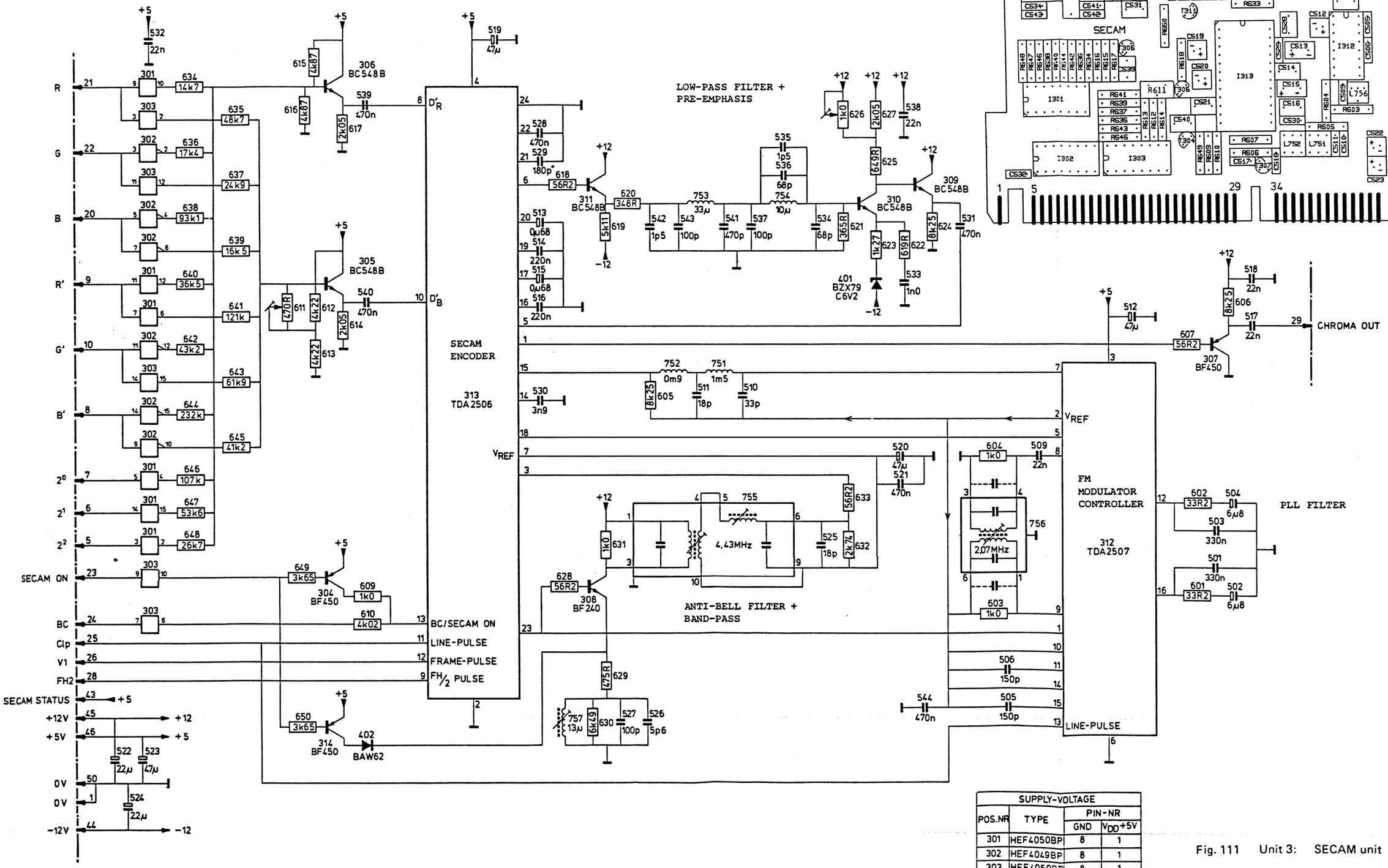

SUPPLY-VOLTAGE			
POS.NR	TYPE	PIN-NR	
		GND	V_{DD}+5V
301	HEF4050BP	8	1
302	HEF4049BP	8	1
303	HEF4050BP	8	1

Fig. 111 Unit 3: SECAM unit

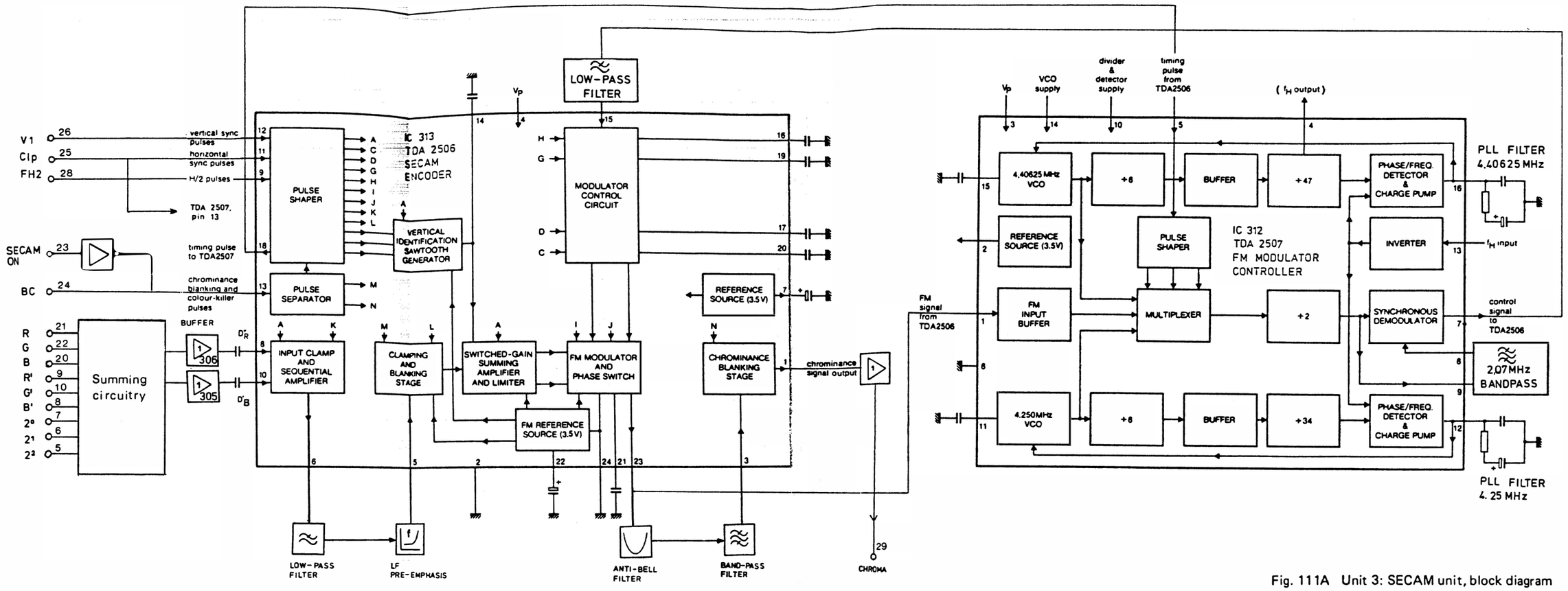

Fig. 111A Unit 3: SECAM unit, block diagram

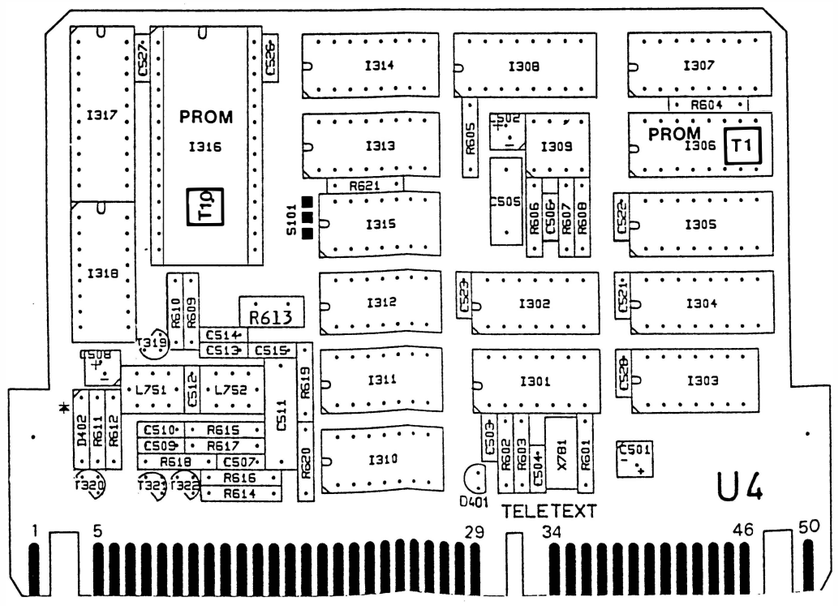

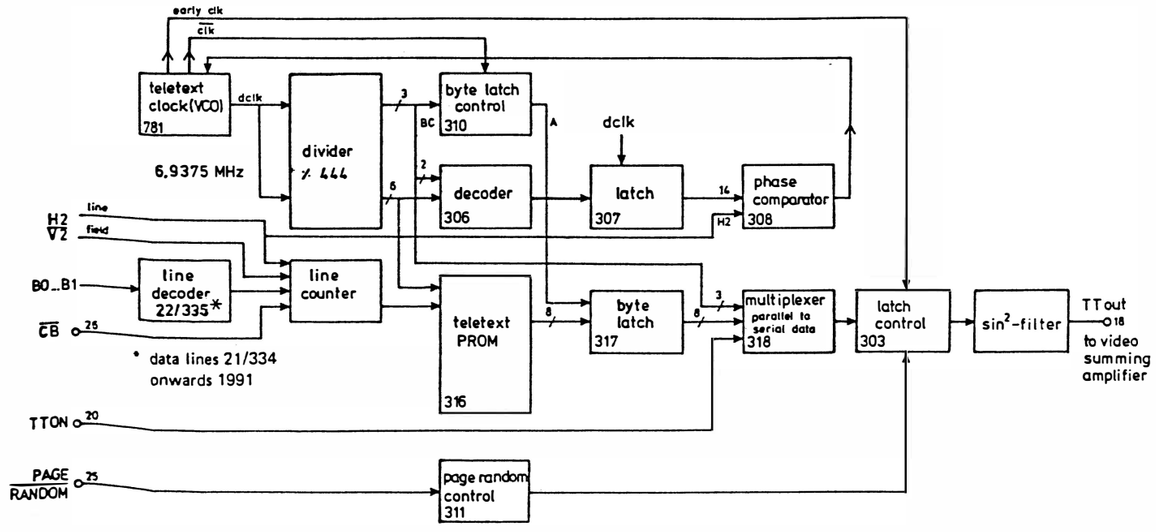

Fig. 112 Unit 4: Teletext unit

SUPPLY-VOLTAGE				
POS.NR	TYPE	PIN-NR		
		GND	V_{CC} +5V	V_{CC} +12V
301	PC74HCU04	7 (1,3,5,11,13)	14	
302	N74LS04	7 (5)	14	
303	N74LS74	7	14	
304	N74LS169	8	16	
305	N74LS169	8	16	
306	N82S129N	8	16	
307	N74LS175	8	16	
308	HEF4046	8	16	
309	ICL7621	4		8
310	N74LS20	7	14	
311	N74LS32	7	14	
312	N74LS74	7	14	
313	N74LS169	8	16	
314	N74LS169	8	16	
315	N74LS08	7	14	
316	HN48 2764	14 (22)	28 (1,27)	
317	N74LS273	10	20	
318	N74LS151	8	16	

Fig. 113 Unit 4: Teletext unit

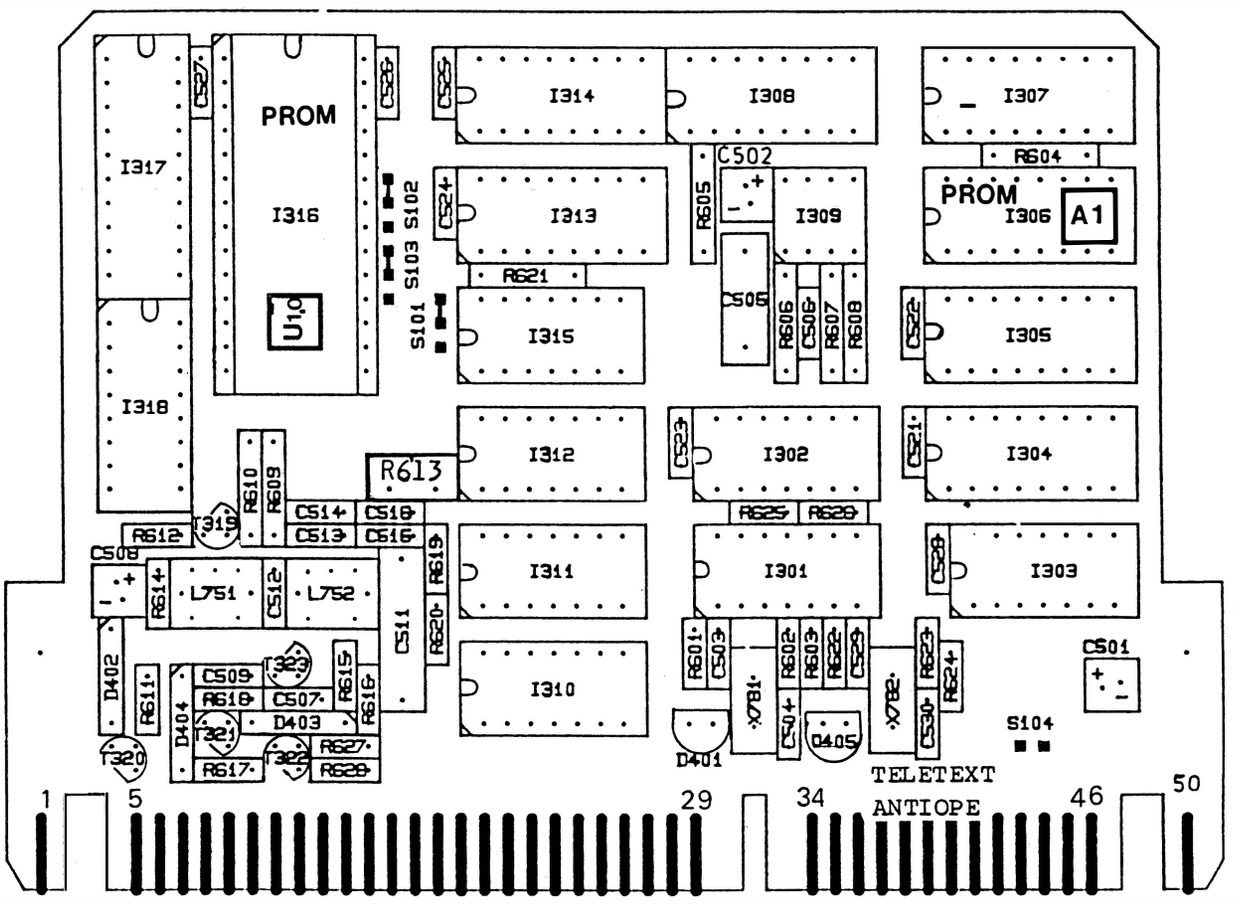

Fig. 114 Unit 4A: Teletext/Antiope unit, component lay-out

SUPPLY-VOLTAGE				
POS.NR	TYPE	PIN-NR		
		GND	VCC +5V	VCC +12V
301	PC74HC00	7	14	
302	N74LS04	7	14	
303	N74LS74	7	14	
304	N74LS169	8	16	
305	N74LS169	8	16	
306	N82S129N	8	16	
307	N74LS175	8	16	
308	HEF4046	8	16	
309	ICL7621	4		8
310	N74LS20	7	14	
311	N74LS32	7	14	
312	N74LS74	7	14	
313	N74LS169	8	16	
314	N74LS169	8	16	
315	N74LS08	7	14	
316	HN48 27128	14(22)	28(1)	
317	N74LS273	10	20	
318	N74LS151	8	16	

SOLDERSWITCH POSITION				TT PAL	TT SECAM	E-PROM	PAGES	APPLICATION
S101	S102	S103	S104					
1	2	2	OFF	*		2764	5	NOT USED
1	2	2	ON		*	2764	(5)	NOT USED
2	2	2	OFF	*		27128	10	NOT USED
2	2	2	ON		*	27128	(10)	NOT USED
1	1	1	OFF	SELECTABLE		27128	5/(5)	PM5516T/PM5518.TX
2	1	1	OFF	SELECTABLE		27256	10/(10)	NOT USED

Fig. 115 Unit 4A: Teletext/Antiope unit

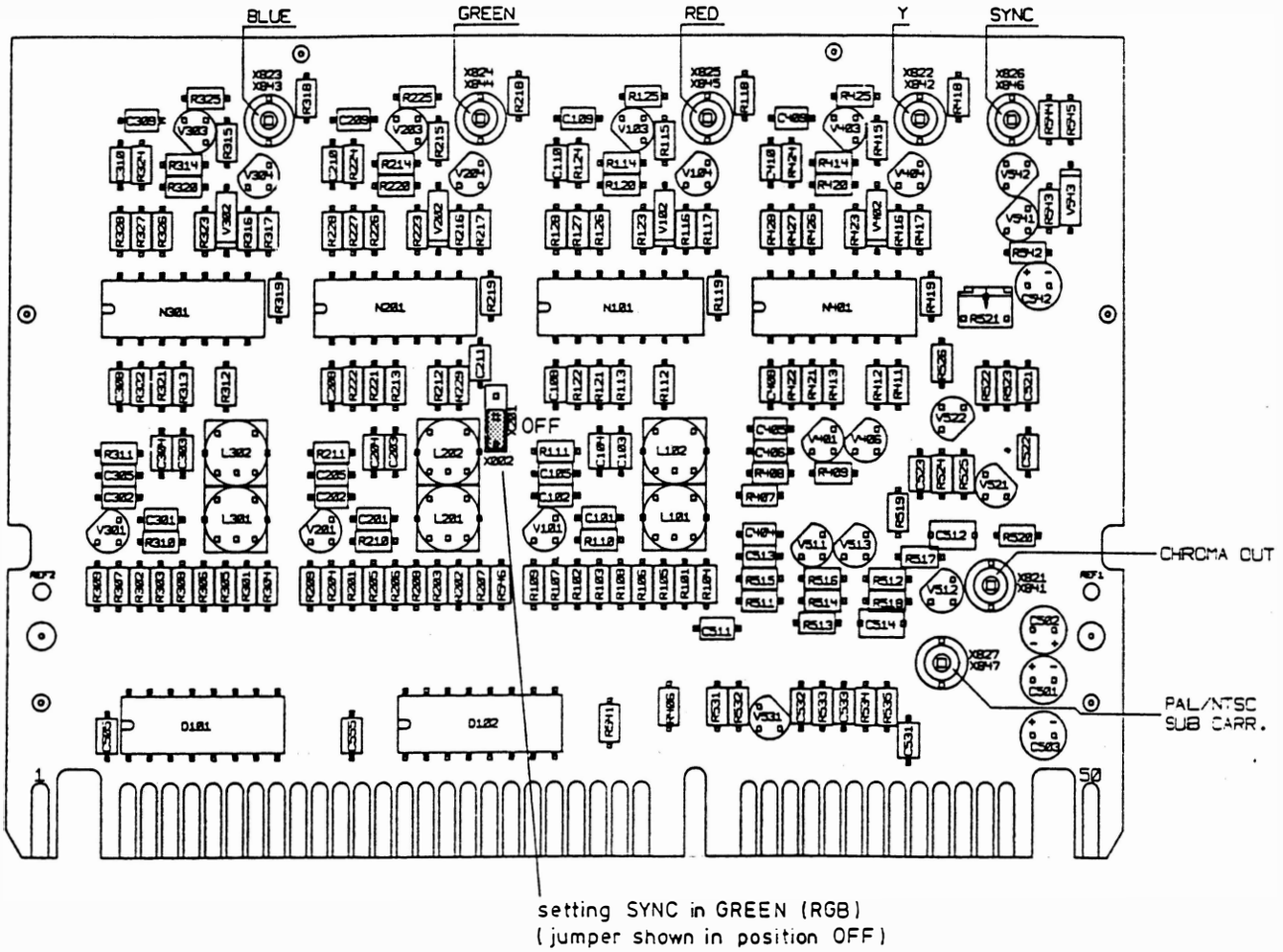

Fig. 116 Unit 5: Y/C & RGB unit, component lay-out

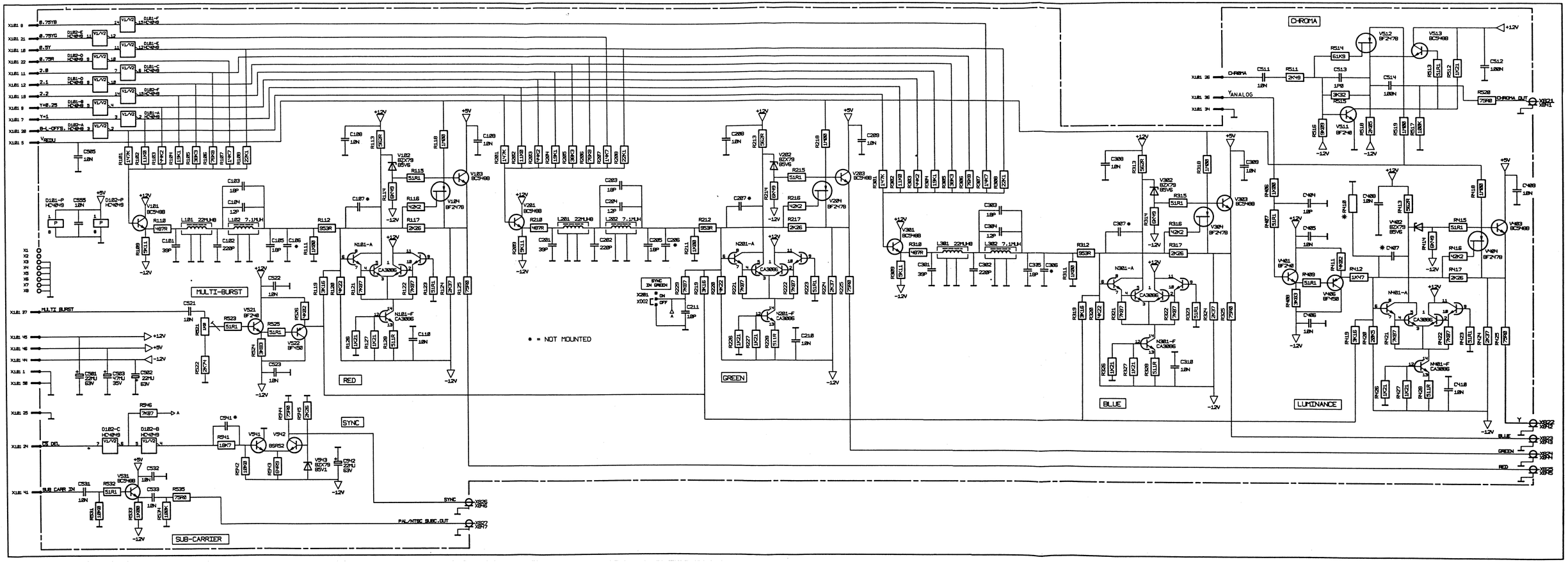

Fig. 117 Unit 5: Y/C & RGB unit

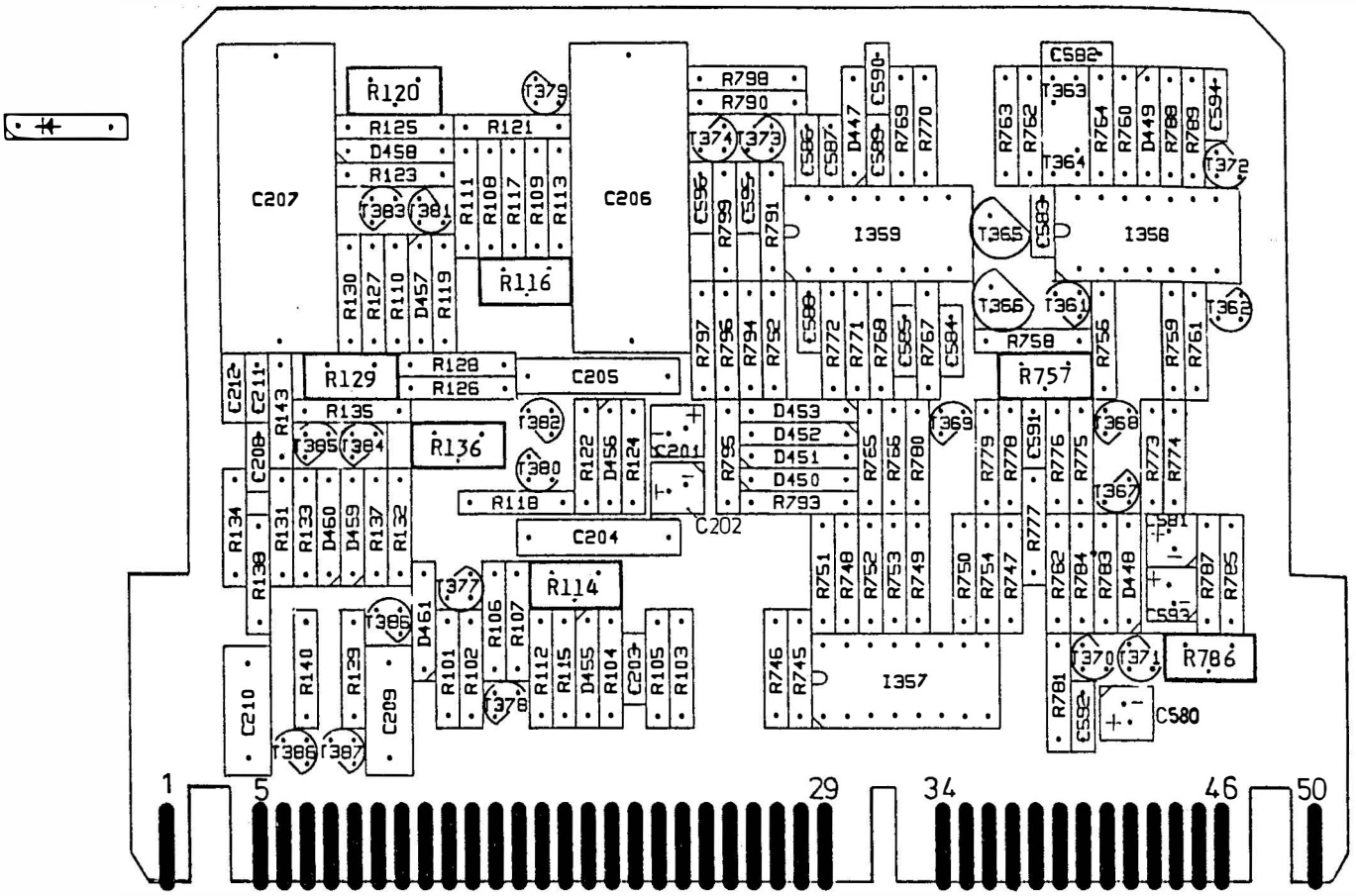

Fig. 118 Unit 6: multiburst/circle unit

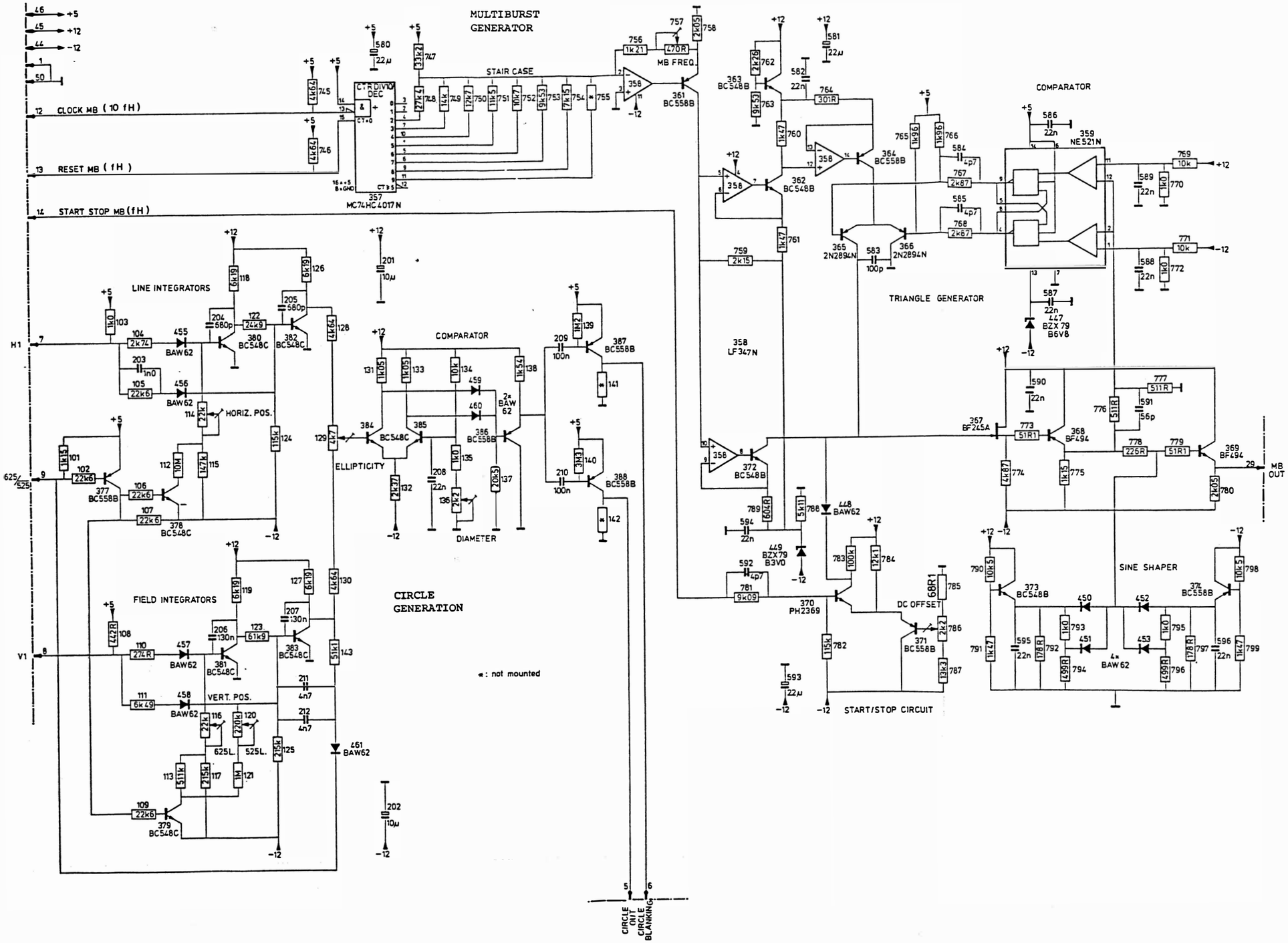

Fig. 119 Unit 6: multiburst/circle unit

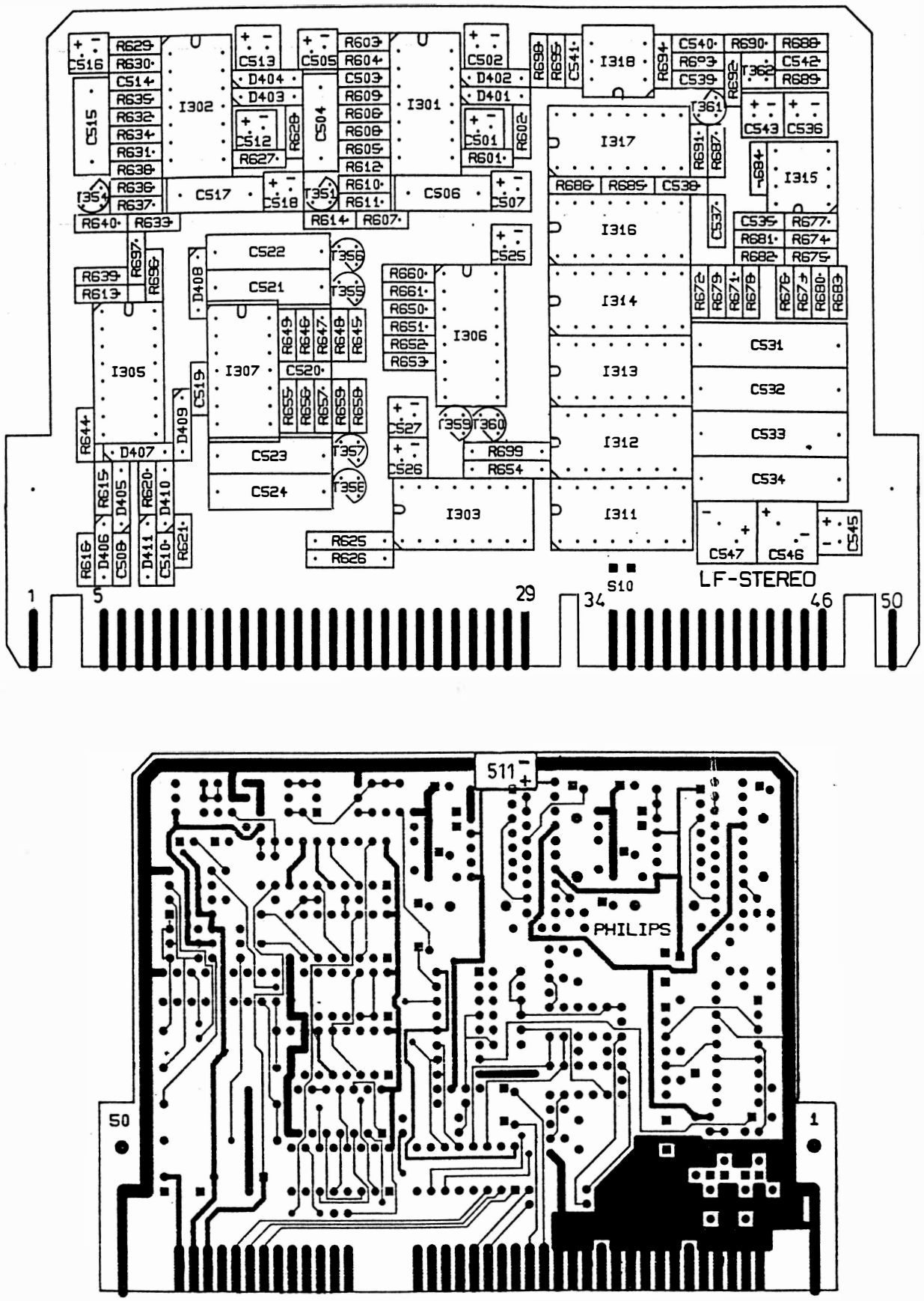

Fig. 120 Unit 7: LF dual/stereo sound unit

SUPPLY-VOLTAGE			
POS. NR.	TYPE	PIN NR.	
		GND	V_{DD} + 5V
303	HEF4094 BP	8	16
305	HEF4052 BP	8	16
306	HEF4053 BP	8	16
311	HEF4040 BP	8	16
312	HEF4082 BP	7	14
313	HEF4526 BP	8	16
314	HEF4018 BP	8	16
316	HEF4046 BP	8	16
317	HEF4526 BP	8	16

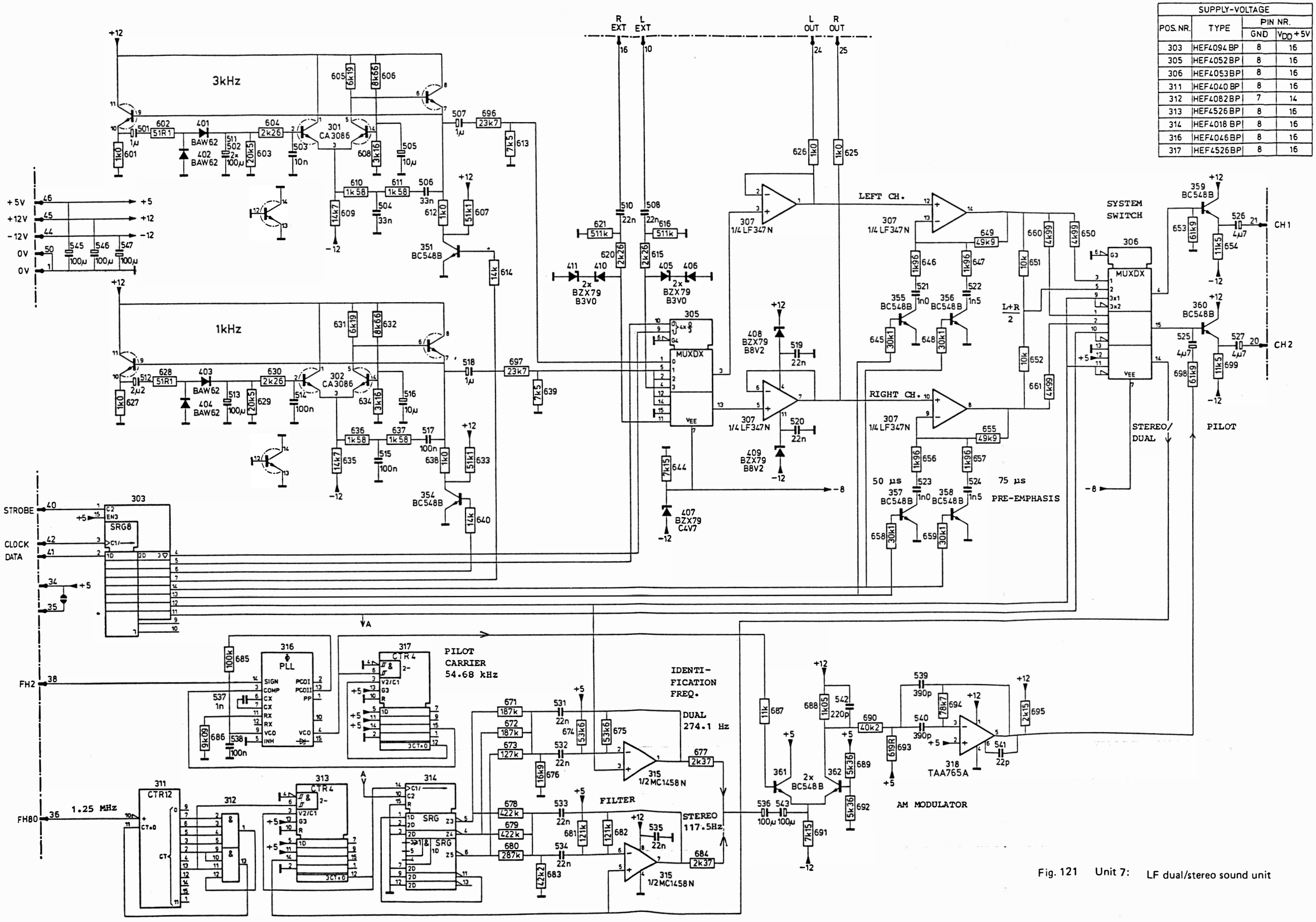

Fig. 121 Unit 7: LF dual/stereo sound unit

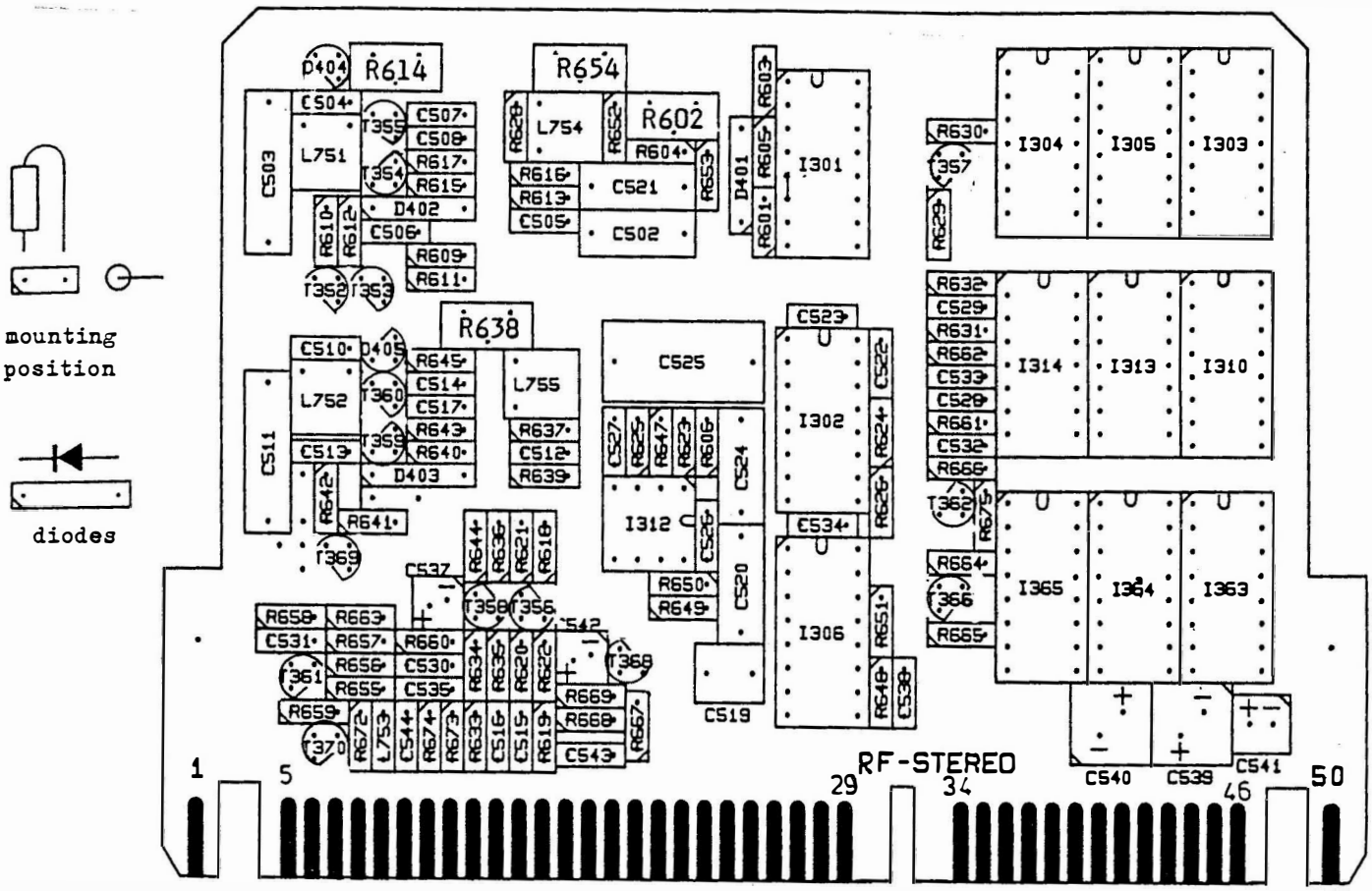

Fig. 122 Unit 8: RF dual/stereo sound unit

SHIFT REGISTER +
SOUND LOGIC

STROBE
CLOCK
DATA
LF CH1
LF CH2
AM
RF
DEVIATION
30/15 kHz
DEV.
SOUND VCO1
4.5/5.5/6/6.5 MHz
FM MODULATOR
AMPL. CARR.1
AMPL. CARR.2
SOUND VCO2
5.742 MHz
FM MODULATOR
PROGR. DIVIDER VCO 1
PROG. DIVIDER VCO2
AM MODULATOR
SOUND CARRIER OUT

SUPPLY-VOLTAGE			
POS. NR	TYPE	PIN-NR	
		GND	V_{CC} +5V
303	N74LS393N	7	14
304	N74LS11N	7	14
305	N74LS169AN	8	16
310	HEF4094BP	8	16
313	HEF4071BP	7	14
314	HEF4011UBP	7	14
363	N74LS169AN	8	16
364	N74LS169AN	8	16
365	N74LS169AN	8	16
301	HEF4053BP	8	16

Fig. 123 Unit 8: RF dual/stereo sound unit

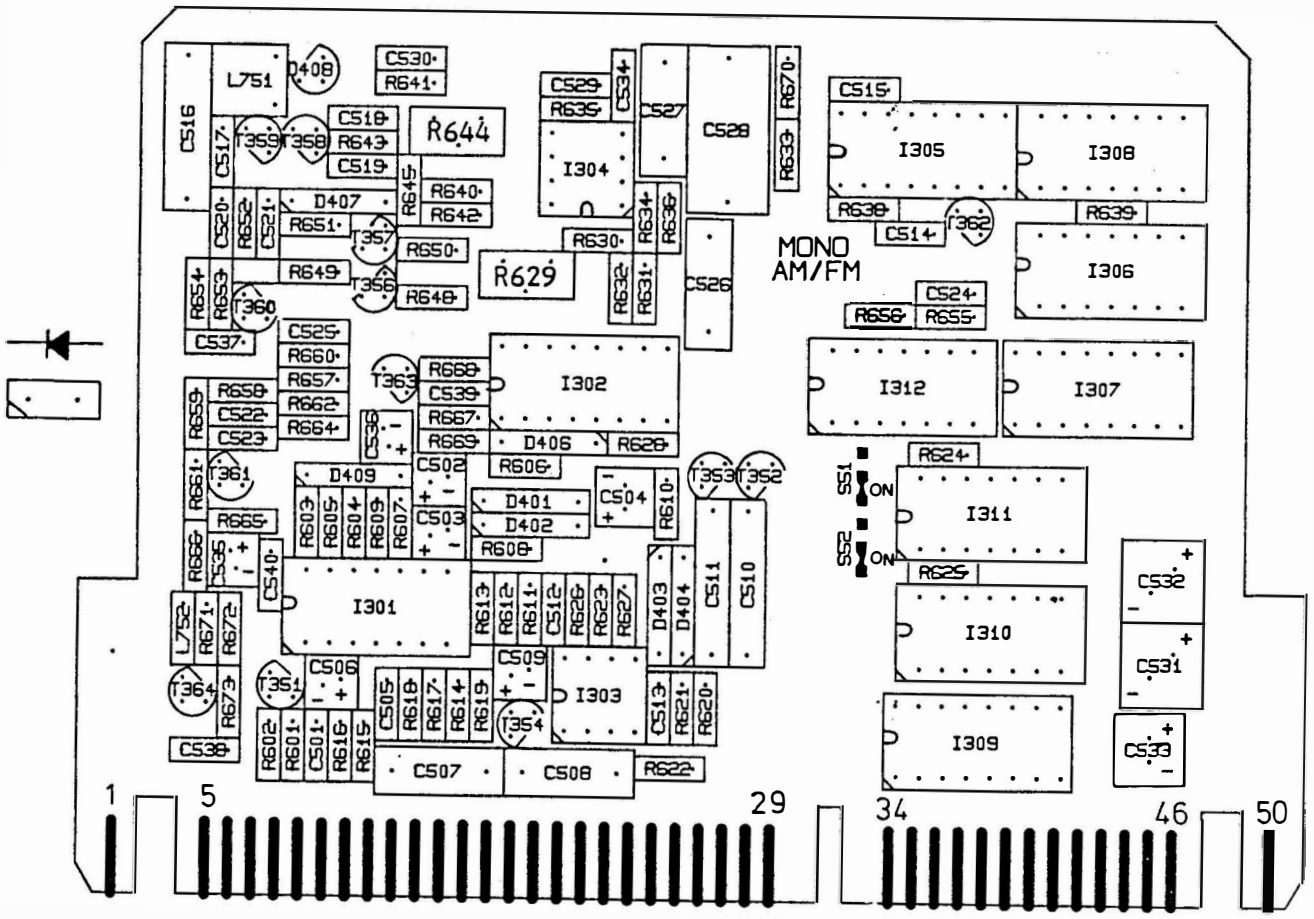

Fig. 124 Unit 9: mono sound AM/FM unit

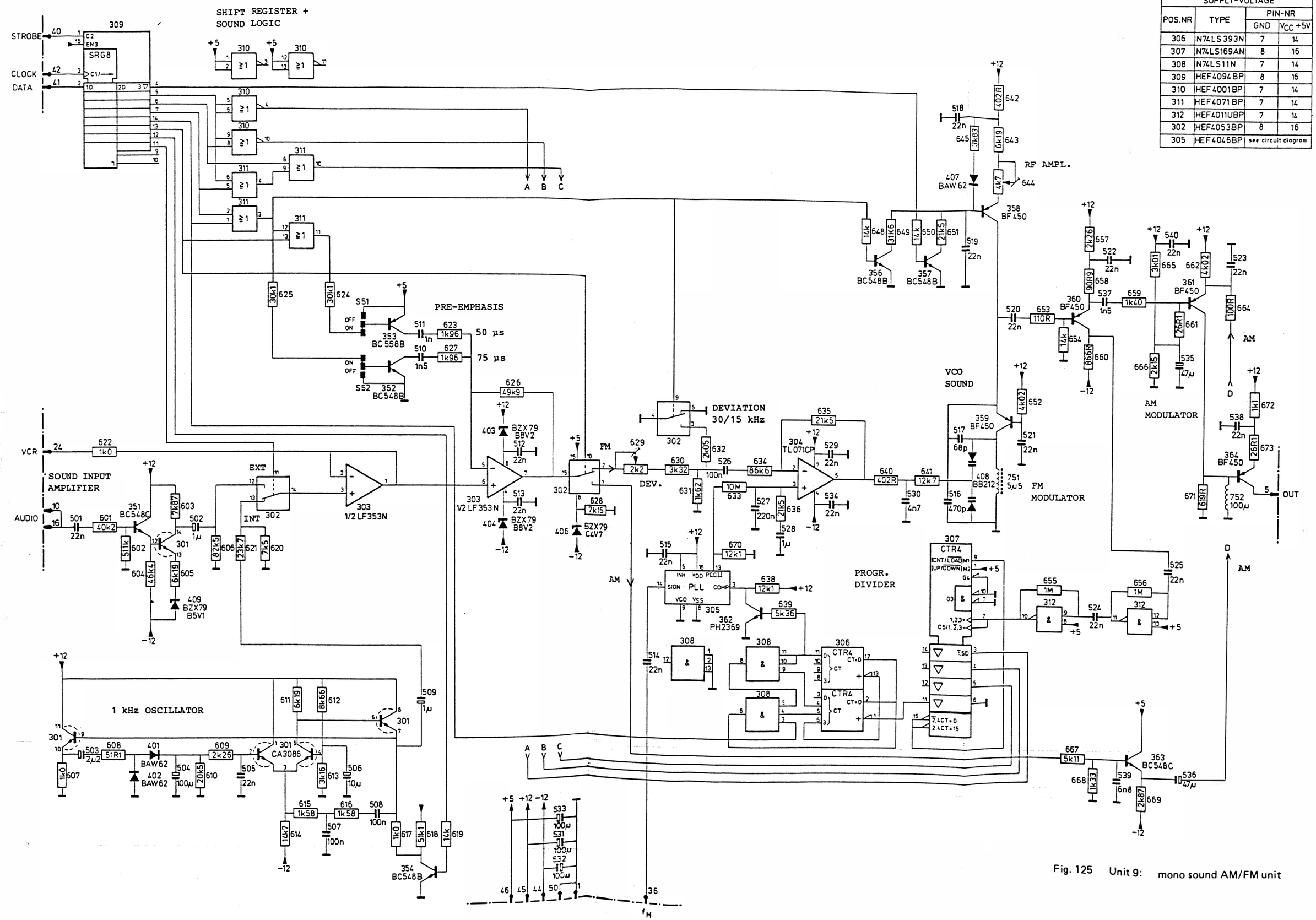

SUPPLY-VOLTAGE			
POS.NR	TYPE	PIN-NR	
		GND	V_{CC} +5V
306	N74LS393N	7	14
307	N74LS169AN	8	16
308	N74LS11N	7	14
309	HEF4094BP	8	16
310	HEF4001BP	7	14
311	HEF4071BP	7	14
312	HEF4011UBP	7	14
302	HEF4053BP	8	16
305	HEF4046BP	see circuit diagram	

Fig. 125 Unit 9: mono sound AM/FM unit

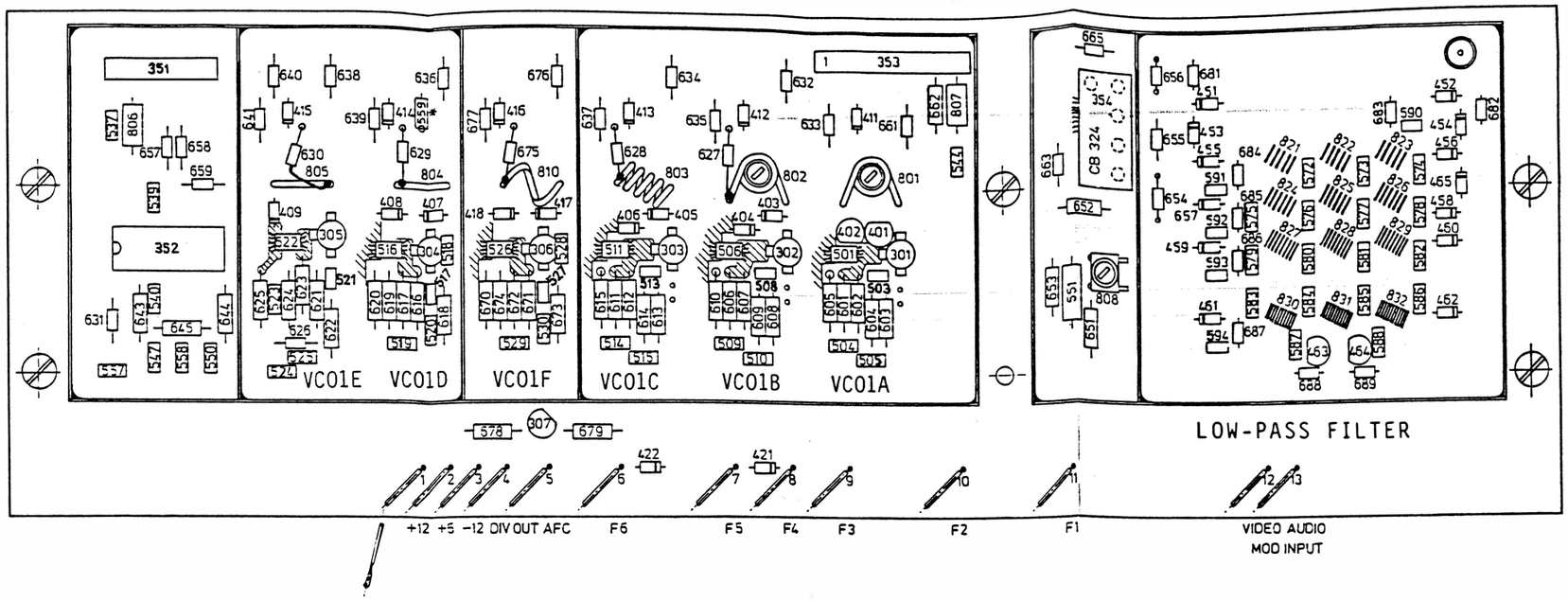

Pos.301...306

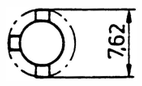

Pos. 501, 506, 511, 516, 522, 526:
use only special solder tin with silver.

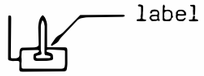

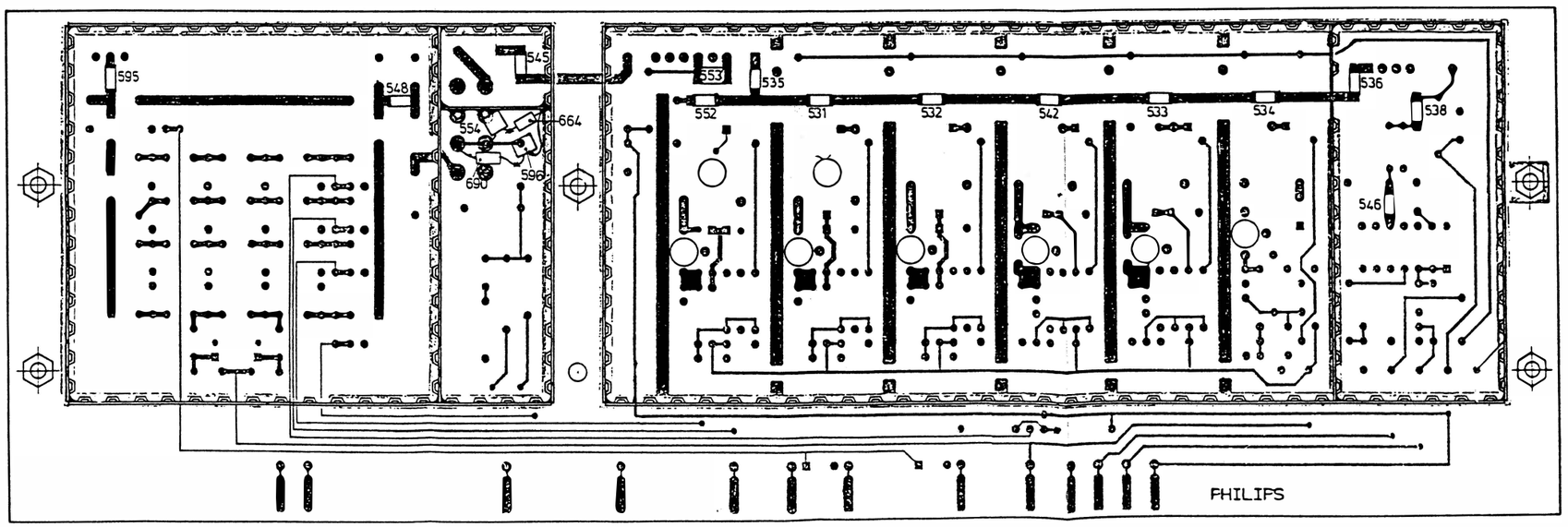

For chip components (e.g. pos. 531)
use only special tin with silver.

Fig. 126 Unit 10: RF unit 32 – 900 MHz, component lay-out

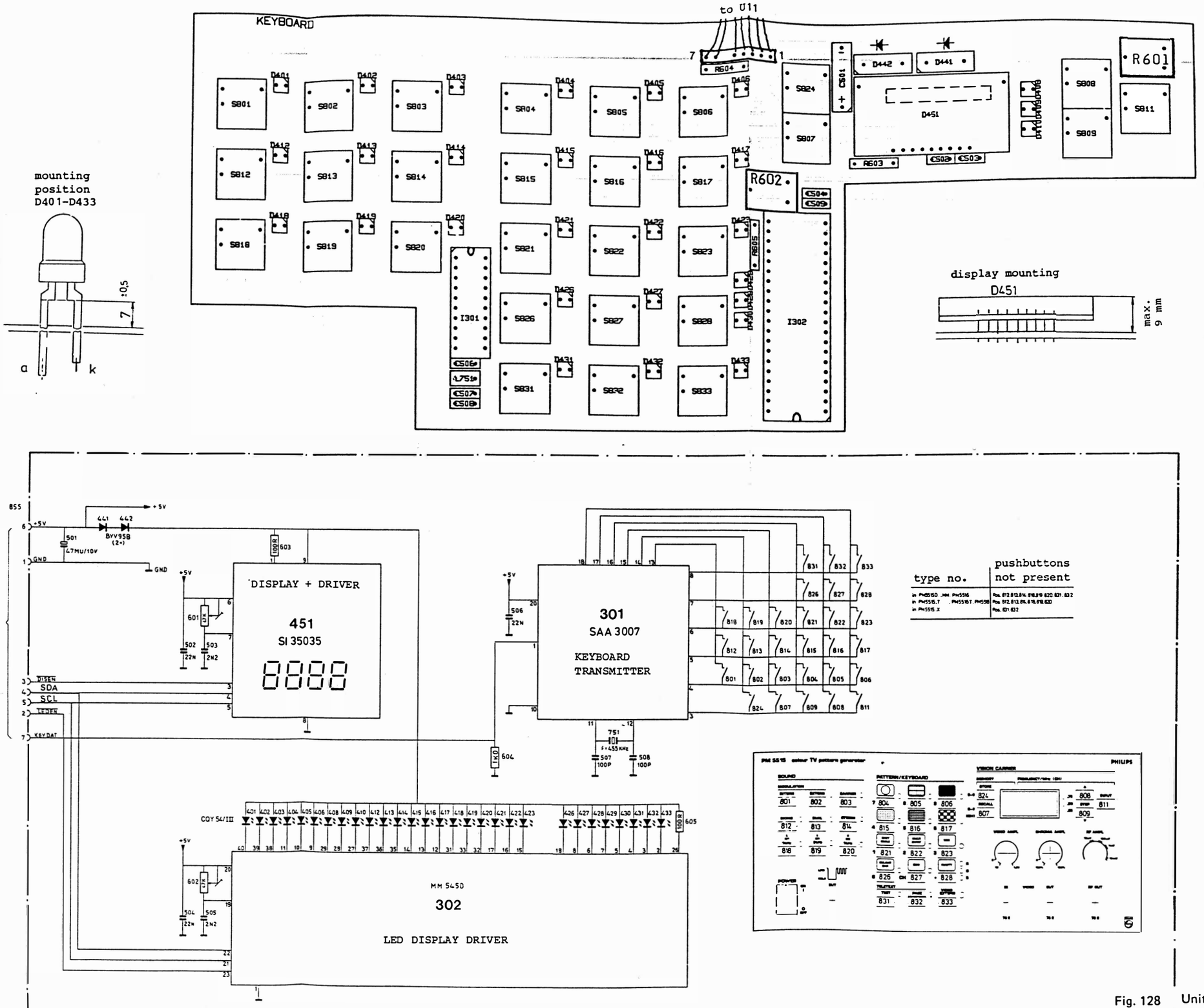

Fig. 128 Unit 12: keyboard/display unit

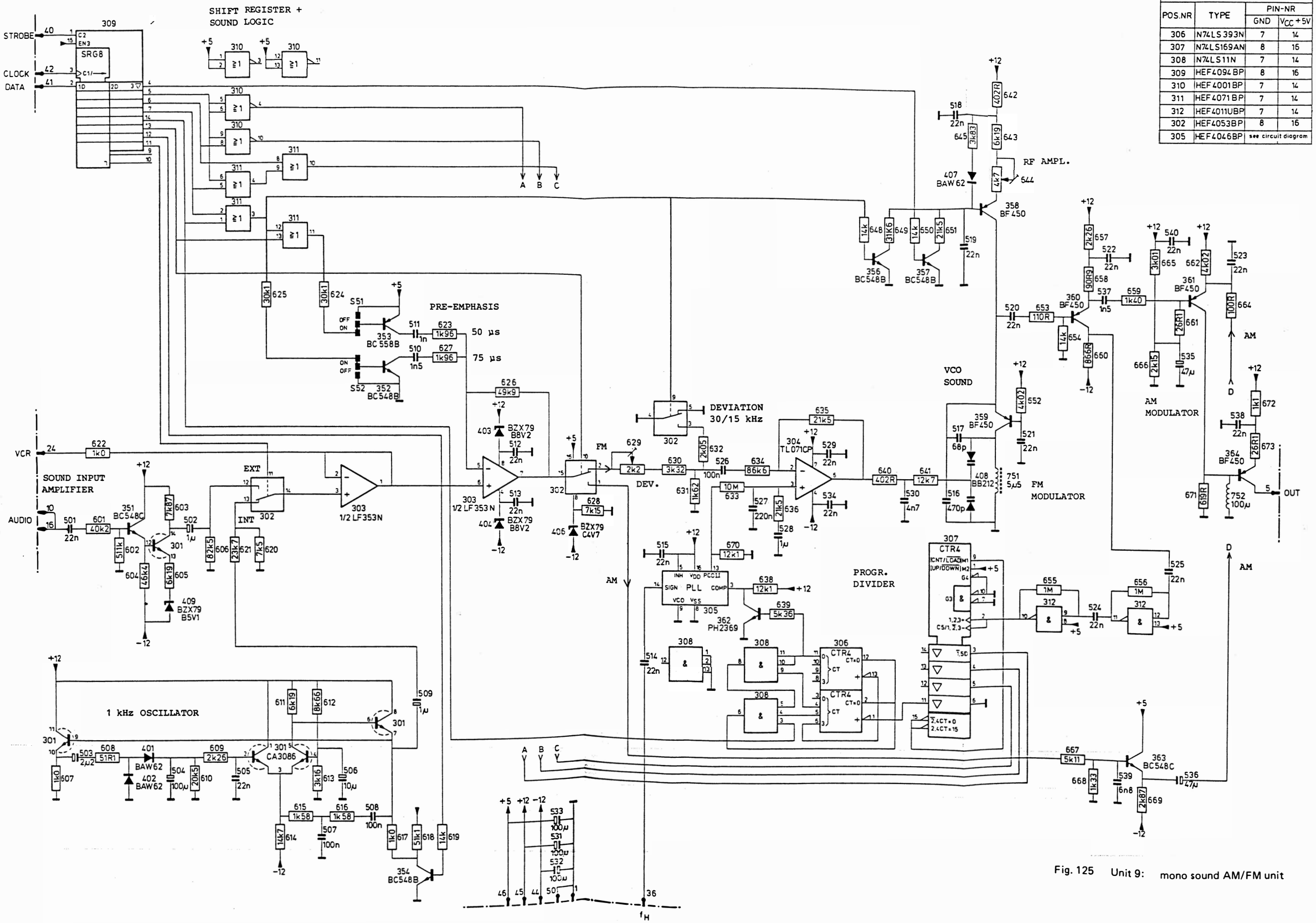

SUPPLY-VOLTAGE			
POS.NR	TYPE	PIN-NR	
		GND	V_{CC} +5V
306	N74LS393N	7	14
307	N74LS169AN	8	16
308	N74LS11N	7	14
309	HEF4094BP	8	16
310	HEF4001BP	7	14
311	HEF4071BP	7	14
312	HEF4011UBP	7	14
302	HEF4053BP	8	16
305	HEF4046BP	see circuit diagram	

Fig. 125 Unit 9: mono sound AM/FM unit

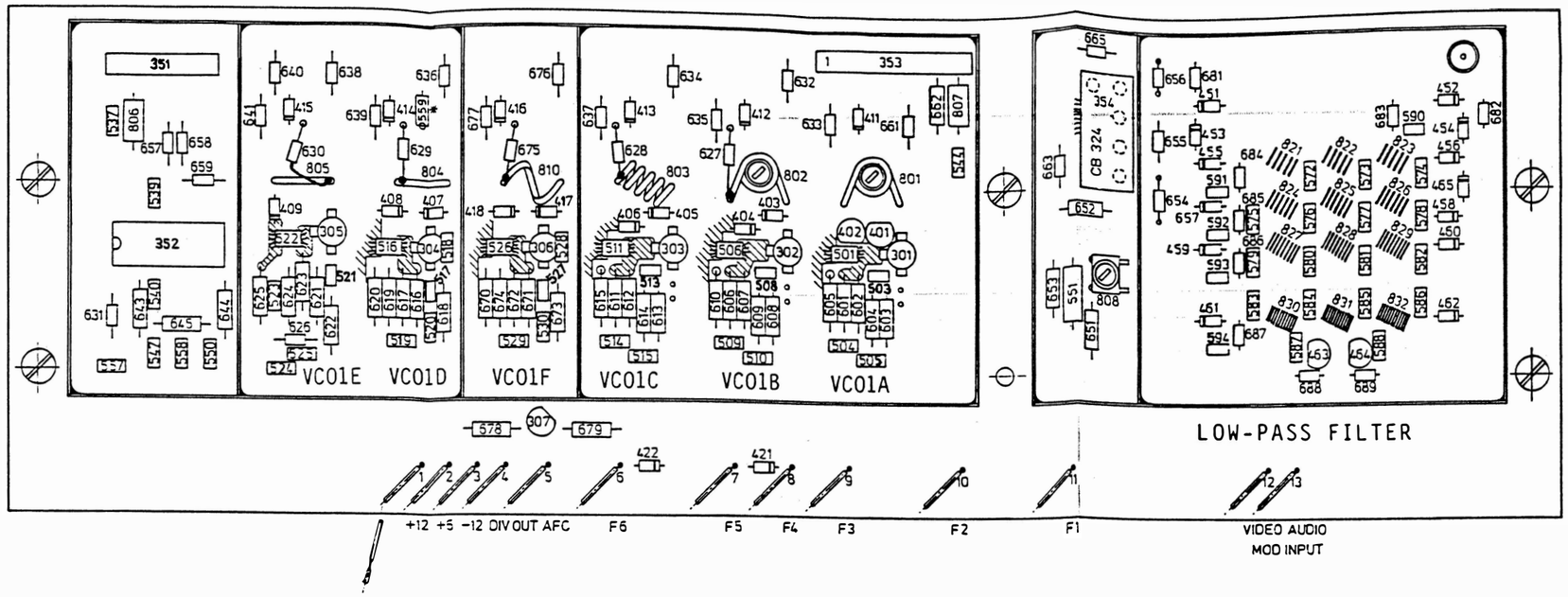

Pos.301...306

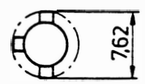

Pos. 501, 506, 511, 516, 522, 526:
use only special solder tin with silver.

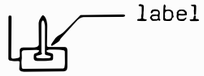

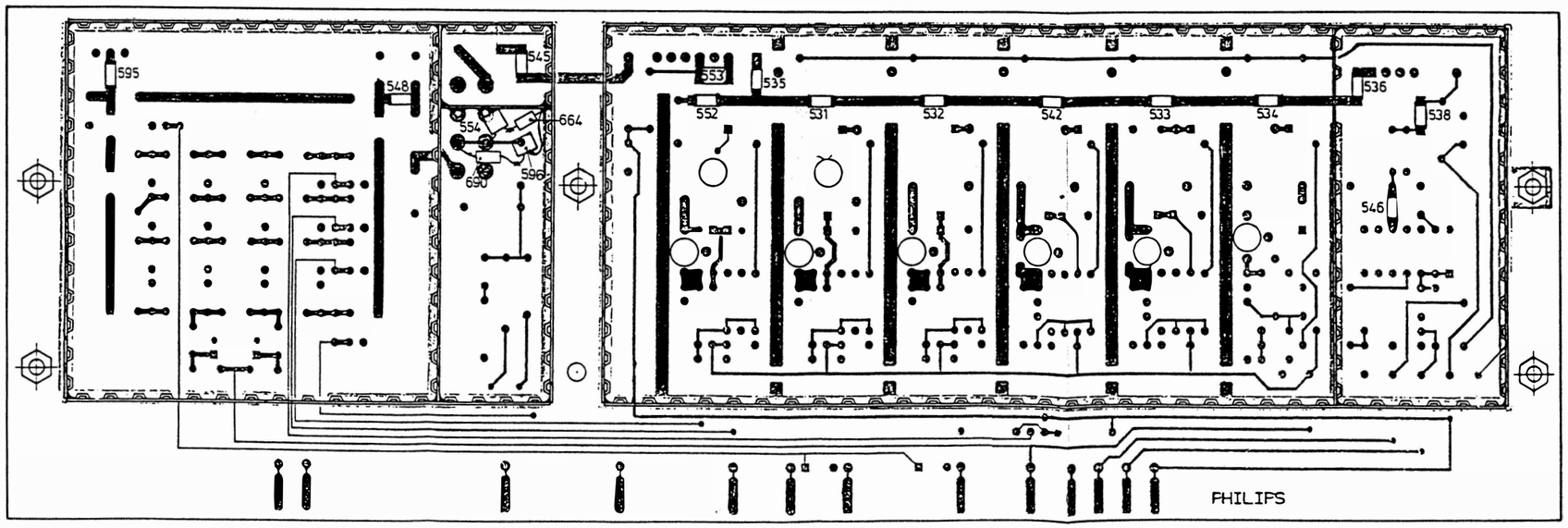

For chip components (e.g. pos. 531)
use only special tin with silver.

Fig. 126 Unit 10: RF unit 32 — 900 MHz, component lay-out

(421) −12V
(33) +12V
(31) +5V
MOD INPUT VIDEO AUDIO
RF-OUTPUT
851 852
VCO1A
VCO1B
VCO1C
VCO1D
VCO1E
VCO1F
LOW-PASS FILTER
> 470 MHz
300 - < 470 MHz
180 - < 300 MHz
90 - < 180 MHz
32 - < 90 MHz
*not mounted
MIXER
may be altered in test
DIVIDER by 256
DIV OUTPUT (32)
F1 (34)
F2 (35)
F3 (36)
F5 (37)
F6 (38)
AFC (39)
F4
(318/3 Mainprint)
* may be altered in test

Fig. 127 Unit 10: RF unit 32 – 900 MHz

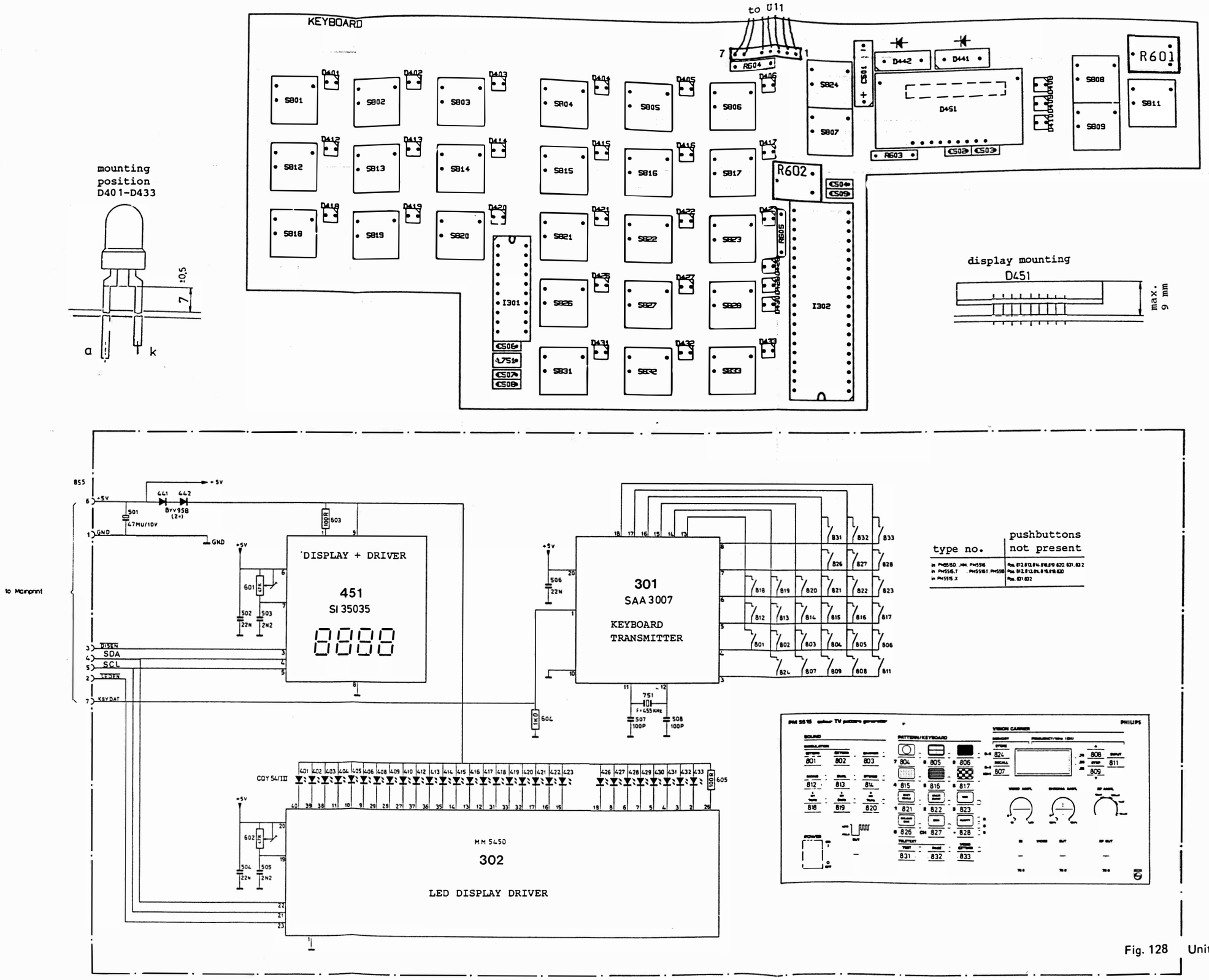

Fig. 128 Unit 12: keyboard/display unit

Systems used in various countries

Explanation of signs used in the table:

* : planned (whether the standard is indicated or not);

– : not yet planned, or no information received;

/ : the abbreviation following the stroke indicates the colour transmission system in use (NTSC, PAL, or SECAM).

Country	System used in bands:	
	I/III VHF broadcasting	IV/V UHF broadcasting
Algeria (Algerian Democratic and Popular Republic)	B, PAL	G*, H*/PAL
Germany (Federal Republic of)	B/PAL	G/PAL
Netherlands Antilles	M	–
Saudi Arabia (Kingdom of)	B/SECAM	G/SECAM
Argentine Republic	N/PAL	N/PAL
Australia	B/PAL	H PAL
Austria	B/PAL	G/PAL
Bangladesh (People's Republic of)	B/PAL	–
Belgium	B/PAL	H/PAL
Benin (People's Republic of)	K1	K1*
Brazil (Federative Republic of)	M/PAL	M/PAL
Bulgaria (People's Republic of)	D/SECAM	K/SECAM
Burundi (Republic of)	K1*	K1*
Cameroon (United Republic of)	K1	K1*
Canada	M/NTSC	M/NTSC
Central African Republic	K1	K1*
Chile	M/NTSC	M/NTSC
China (People's Republic of)	D/PAL	K/PAL
Cyprus (Republic of)	B	G*
Colombia (Republic of)	M	M*
Congo (People's Republic of the)	K1	K1*
Korea (Republic of)	M	–
Ivory Coast (Republic of the)	K1	K1*
Cuba	M	M
Denmark	B/PAL	G*
Egypt (Arab Republic of)	B	G*, H*
Group of territories represented by the French Overseas Post and Telecommunication Agency	K1	–
Spain	B/PAL	G/PAL
United States of America	M/NTSC	M/NTSC
Ethiopia	B	G*
Finland	B/PAL	G/PAL
France	L/SECAM	L/SECAM
Gabon Republic	K1	K1*
Ghana	B*	G*
Greece	B*/SECAM	G*/SECAM
Guinea (Revolutionary People's Republic of)	K1	K1*
Upper Volta (Republic of)	K1	K1*
Hungarian People's Republic	D/SECAM	K/SECAM

Country	System used in bands:	
	I/III VHF broadcasting	IV/V UHF broadcasting
India (Republic of)	B/PAL	–
Indonesia (Republic of)	B/PAL	–
Iran (Islamic Republic of)	B/SECAM	G/SECAM
Ireland	I/PAL	I/PAL
Iceland	B	G
Israel (State of)	B	G
Italy	B/PAL	G/PAL
Jamaica	M	–
Japan	M/NTSC	M/NTSC
Jordan (Hashemite Kingdom of)	B	G*
Kenya (Republic of)	B	G*
Kuwait (State of)	B	G*
Liberia (Republic of)	B	H*
Libya (Socialist People's Libyan Arab Jamahiriya)	B /SECAM	G*
Luxembourg	C/PAL	L*/SECAM (2) G/PAL
Madagascar (Democratic Republic of)	K1	K1*
Malaysia	B/PAL	G*/PAL
Malawi	B	G*
Mali (Republic of)	K1	K1*
Malta (Republic of)	B	H*
Morocco (Kingdom of)	B/SECAM	H*
Mauritius	B	I*
Mauritania (Islamic Republic of)	K1	K1*
Mexico	M	M*
Monaco	L/SECAM	L/G/SECAM
Niger (Republic of the)	K1	K1*
Nigeria (Federal Republic of)	B	I*
Norway	B/PAL	G /PAL
New Zealand	B/PAL	–
Uganda (Republic of)	B	G*
Pakistan (Islamic Republic of)	B	–
Panama (Republic of)	M	–
Netherlands (Kingdom of the)	B/PAL	G/PAL
Peru	M	M
Poland (People's Republic of)	D/SECAM	K/SECAM
Portugal	B/PAL	G/PAL
Portuguese Oversea Provinces	I*	I*
Roumania (Socialist Republic of)	D	K*
United Kingdom of Great Britain and Northern Ireland	I/PAL	I/PAL
Rwanda (Republic of)	K1*	K1*
Senegal (Republic of the)	K1	K1*
Sierra Leone	B	G
Singapore (Republic of)	B	G
Somali Democratic Republic	B	G*
Sri Lanka (Democratic Socialist Republic of)	B	–
South Africa (Republic of)	I	I
Sweden	B/PAL	G/PAL
Switzerland (Confederation of)	B/PAL	G/PAL
Suriname (Republic of)	M	–
Tanzania (United Republic of)	B	
Chad (Republic of the)	K1	K1*
Czechoslovak Socialist Republic	D/SECAM	K/SECAM
Overseas territories for the international relations of which the Government of the United Kingdom of Great Britain and Northern Ireland are responsible	B*, I*	I*
Overseas territories of the United Kingdom in the European Broadcasting Area	–	H*
Thailand	B/PAL	G/PAL*
Togolese Republic	K1	K1*
Tunisia	B/SECAM	–
Turkey	B/PAL	G /PAL
Union of Soviet Socialist Republics	D/SECAM	K/SECAM
Uruguay (Oriental Republic of)	N	–
Venezuela (Republic of)	M	–
Yugoslavia (Socialist Federal Republic of)	B/PAL	G/PAL
Zaire (Republic of)	K1	K1*
Zambia (Republic of)	B	G*
Zimbabwe (Republic of)	B	G*

Level/voltage

In the application area of TV and antenna systems mostly 75 Ω technique is used.
Reference voltage: E_0 = 1 µV at 75 Ω
≙ 0 dBµV

voltage at 75 Ω µV	level dBµV	voltage at 75 Ω mV	level dBµV	voltage at 75 Ω V	level dBµV
1	0	1	60	1	120
1,5	3,5	1,5	63,5	1,5	123,5
2	6	2	66	2	126
2,5	8,0	2,5	68	2,5	128
3	9,5	3	69,5	3	129,5
3,5	11	3,5	71	3,5	131
4	12	4	72	4	132
4,5	13	4,5	73	4,5	133
5	14	5	74	5	134
6	15,5	6	75,5	6	135,5
7	17	7	77	7	137
8	18	8	78	8	138
9	19	9	79	9	139
10	20	10	80	10	140
15	23,5	15	83,5		
20	26	20	86		
25	28	25	88		
30	29,5	30	89,5		
35	31	35	91		
40	32	40	92		
45	33	45	93		
50	34	50	94		
60	35,5	60	95,5		
70	37	70	97		
80	38	80	98		
90	39	90	99		
100	40	100	100		
150	43,5	150	103,5		
200	46	200	106		
250	48	250	108		
300	49,5	300	109,5		
350	51	350	111		
400	52	400	112		
450	53	450	113		
500	54	500	114		
600	55,5	600	115,5		
700	57	700	117		
800	58	800	118		
900	59	900	119		
1000	60	1000	120		

dB/voltage ratio

−	← dB →	+
1,0	0,0	1,0
0,94	0,5	1,06
0,89	1	1,12
0,84	1,5	1,19
0,8	2	1,25
0,75	2,5	1,33
0,71	3	1,41
0,67	3,5	1,5
0,63	4	1,6
0,6	4,5	1,67
0,56	5	1,78
0,53	5,5	1,88
0,5	6	2,0
0,47	6,5	2,12
0,45	7	2,24
0,42	7,5	2,37
0,4	8	2,5
0,38	8,5	2,66
0,35	9	2,82
0,33	9,5	3,0
0,32	10	3,16
0,28	11	3,55
0,25	12	4,0
0,22	13	4,5
0,2	14	5,0
0,18	15	5,62
0,16	16	6,3
0,14	17	7,1
0,125	18	8,0
0,11	19	8,9
0,10	20	10,0
0,089	21	11,2
0,08	22	12,5
0,071	23	14,1
0,063	24	16,0
0,056	25	17,8
0,05	26	20,0
0,045	27	22,4
0,04	28	25,0
0,035	29	28,2
0,032	30	31,6
0,028	31	35,5
0,025	32	40
0,022	33	45
0,02	34	50
0,018	35	56
0,016	36	63
0,014	37	71
0,0125	38	80
0,011	39	89
0,010	40	100
0,0056	45	178
0,0032	50	316
0,0018	55	562
0,001	60	1000

Level conversion table (75 Ω)

SAA3007

FOR DETAILED INFORMATION SEE RELEVANT DATA BOOK OR DATA SHEET

INFRARED REMOTE CONTROL TRANSMITTER (LOW VOLTAGE)

GENERAL DESCRIPTION

The SAA3007 transmitter IC for infrared remote control systems has a capacity for 1280 commands arranged in 20 subsystem address groups of 64 commands each. The subsystem address may be selected by press-button or slider switches, or be hard-wired.

Commands are transmitted in patterns of pulses coded by the pulse spacing. The pulses can be infrared flashed (single pulse) or modulated. Flashed infrared transmissions require a wideband preamplifier at the receiver, but modulated transmissions allow a narrow band receiver to be used for improved noise rejection. The modulation frequency of the SAA3007 is 455 kHz which allows disturbance-free infrared operation in the presence of 10 - 100 kHz fluorescent lamps.

Features

- Flashed or modulated transmission modes
- Immune from fluorescent lamp disturbance in modulated mode
- Supply voltage range 2 V to 6,5 V
- 40 mA output current capability
- Very low standby current ($< 4\ \mu A$ at $V_{DD} = 6$ V)
- Up to 20 subsystem address groups
- Up to 64 commands per subsystem address } up to 1280 commands
- Requires few additional components

PACKAGE OUTLINES

SAA3007P: 20-lead DIL; plastic (SOT-146C1).

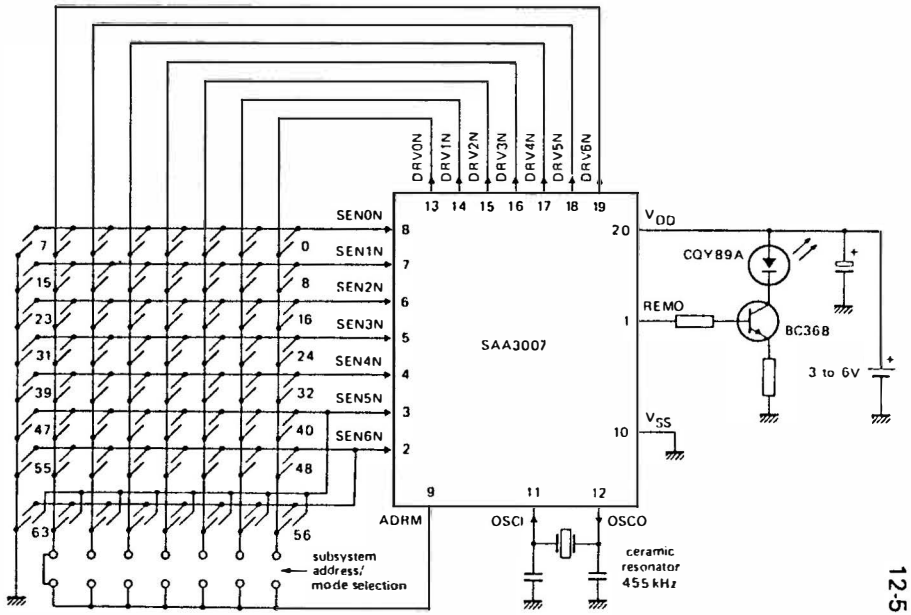

Fig. 1 SAA3007 application example.

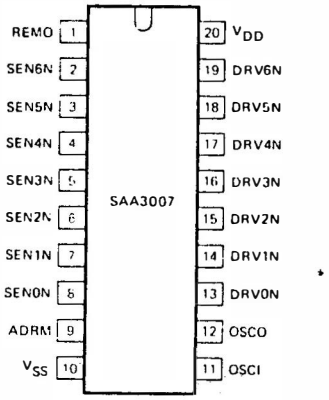

Fig. 2 Pinning diagram.

PINNING

1.	REMO	remote data output
2.	SEN6N	sense inputs from key matrix
3.	SEN5N	
4.	SEN4N	
5.	SEN3N	
6.	SEN2N	
7.	SEN1N	
8.	SEN0N	
9.	ADRM	address/mode control input
10.	V_{SS}	ground (0 V)
11.	OSCI	oscillator input
12.	OSCO	oscillator output
13.	DRV0N	drive outputs to key matrix
14.	DRV1N	
15.	DRV2N	
16.	DRV3N	
17.	DRV4N	
18.	DRV5N	
19.	DRV6N	
20.	V_{DD}	positive supply voltage

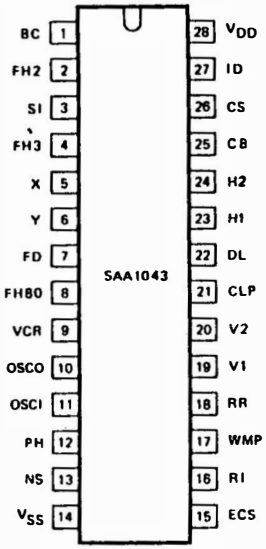

Fig. 2 Pinning diagram.

PINNING

1	BC	burst flag/chroma blanking (SECAM) output
2	FH2	PAL identification output
3	SI	set identification input (SECAM, PAL, PAL-M)
4	FH3	400 Hz (PAL); 360 HZ (NTSC, PAL-M) and $f_H/3$ (SECAM)
5	X	standard programming input
6	Y	standard programming input
7	FD	standard programming input
8	FHB0	80 x f_H output (1,25 MHz)
9	VCR	VCR standard input
10	OSCO	oscillator output
11	OSCI	oscillator input
12	PH	phase detector output
13	NS	no-sync detector output
14	V_{SS}	negative supply voltage (ground)
15	ECS	external composite sync input
16	RI	vertical identification output
17	WMP	white measurement pulse output
18	RR	vertical reset input
19	V1	vertical drive output
20	V2	vertical drive output
21	CLP	clamp pulse output
22	DL	2 x f_H input/output
23	H1	horizontal drive output
24	H2	horizontal drive output
25	CB	composite blanking output
26	CS	composite sync output
27	ID	SECAM identification output
28	V_{DD}	positive supply voltage

UNIVERSAL SYNC GENERATOR

GENERAL DESCRIPTION

The SAA1043 generates the synchronizing waveforms required in all types of video source equipment (video cameras, film-scanners, video games, computer displays and similar applications). The device is programmable to suit standards SECAM 1, SECAM 2, PAL/CCIR, NTSC1, NTSC2, and PAL-M; the video game 624 and 524-line standards; and can be synchronized to an external sync signal. Inputs and outputs are CMOS compatible.

Features

- Programmable to eight standards
- Horizontal frequency manipulation for application in non-standard systems
- Oscillator functions with LC or crystal elements
- Additional outputs to simplify camera signal processing
- Can be synchronized to an external sync signal
- Vertical reset for fast vertical lock
- Subcarrier lock in combination with subcarrier coupler SAA1044
- Very low power consumption

QUICK REFERENCE DATA

Supply voltage range (pin 28)	V_{DD}	5,7 to 7,5	V
Supply current (quiescent)	I_{DD}	max. 10	μA
Oscillator frequency	f_{OSCI}	max. 5,1	MHz

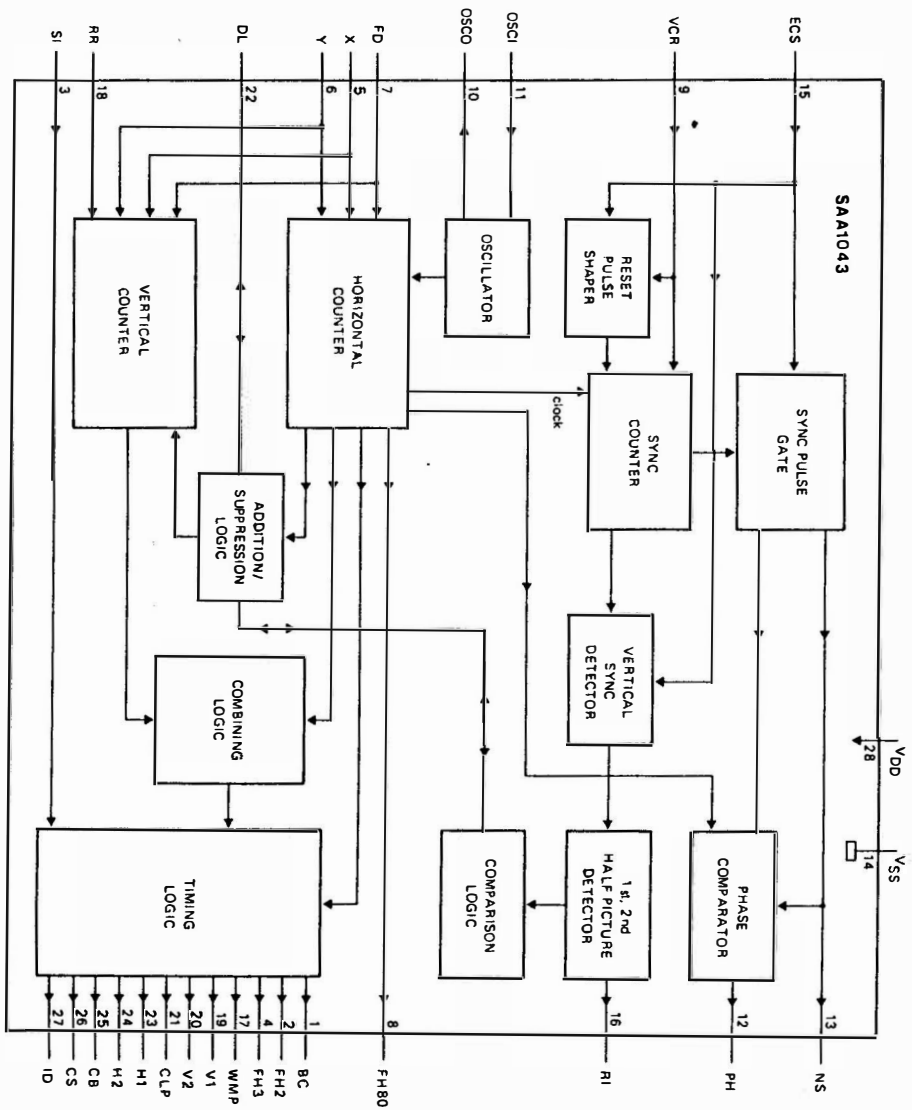

Fig. 1 Block diagram.

FUNCTIONAL DESCRIPTION

Sync pulse generation

Programming of operating standard

The standard required for operation is programmed using the inputs X, Y and FD as shown in Table 1. The FD input selects 525 or 625-line working of the vertical counter (524 or 624-lines for video game standards) and also influences the choice of oscillator frequency as shown in Table 2.

Table 1 Programming of operating standard

standard	FD	X	Y
SECAM 1	0	0	0
SECAM 2	0	0	1
624	0	1	0
PAL/CCIR	0	1	1
NTSC 1	1	0	0
NTSC 2	1	0	1
524	1	1	0
PAL-M	1	1	1

positive logic: 1 = HIGH; 0 = LOW

Oscillator

The built-in oscillator of the SAA1043 functions with an external LC-circuit (Fig. 3) or with a crystal of the parallel resonance type (Fig. 4). For operation in the VCR mode the LC oscillator circuit is recommended. The frequencies required for the operating standards are shown in Table 2.

Table 2 Oscillator input frequencies

operating standard	osc. frequency (f_{OSCI}) MHz	vertical divider (FD)	vertical frequency (f_V) Hz	horizontal frequency (f_H) Hz
PAL, SECAM, 624	5,0	0	50	15625
NTSC, PAL-M, 524	5,034964	1	59,94	15734,26
PAL, SECAM, 624	2,5	H2 (pin 24)	50	15625
NTSC, PAL-M, 524	2,501748	H1 (pin 23)	59,94	15734,26

Output waveforms

The output waveforms for the different modes of operation are shown in Figs 7 and 8.

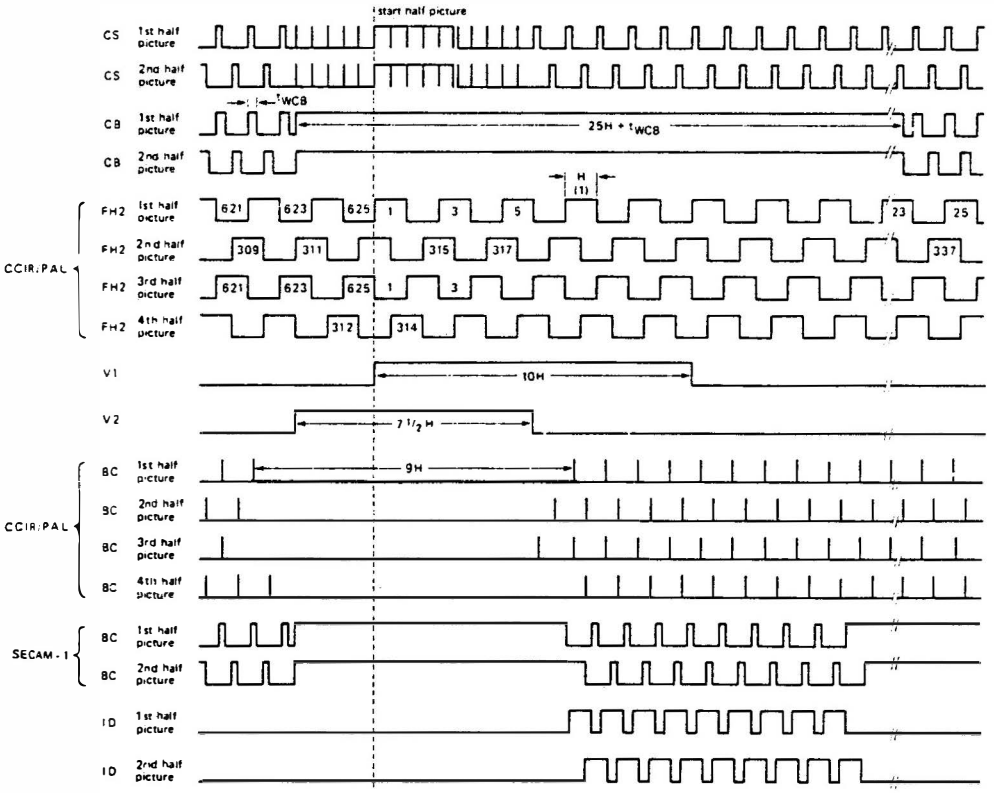

(1) H = 1 horizontal scan.

Fig. 7 Typical output waveforms for PAL/CCIR and SECAM. In the 624-line mode the output waveforms are identical to the 1st half picture of PAL/CCIR and are not interlaced (0,5H subtracted from the waveform timing).

FUNCTIONAL DESCRIPTION (continued)

Output waveforms (continued)

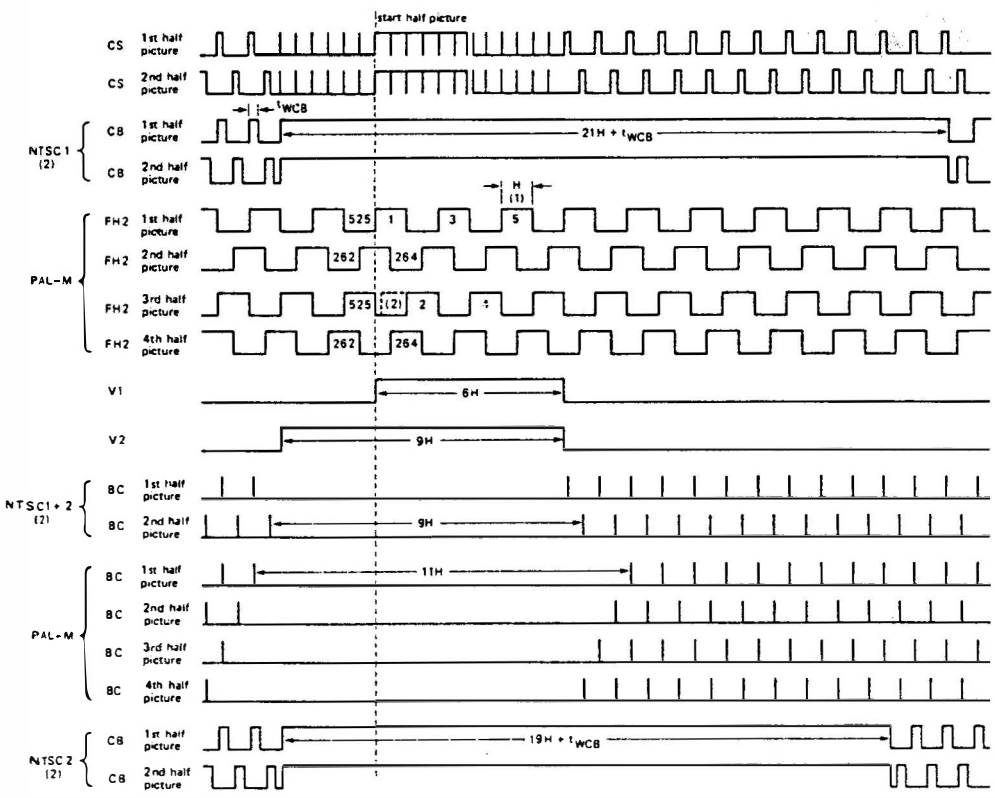

(1) H = 1 horizontal scan.

(2) NTSC mode reset; the 4th half picture is identical to the 2nd half picture for NTSC.

Fig. 8 Typical output waveforms for NTSC and PAL-M. In the 524-line mode the output waveforms are identical to the 1st half picture of NTSC and are not interlaced (0,5H subtracted from the waveform timing).

SUBCARRIER COUPLER

GENERAL DESCRIPTION

The SAA1044 maintains the correct relationship between subcarrier and horizontal scan frequencies when an exact coupling is required. It is for use in combination with sync generator SAA1043 for application in colour video sources (cameras, film-scanners and similar equipments).

Features

- Provides exact relationship between subcarrier and horizontal scan frequencies
- Accommodates all standard frequencies
- Facilitates GENLOCK (general locking) applications

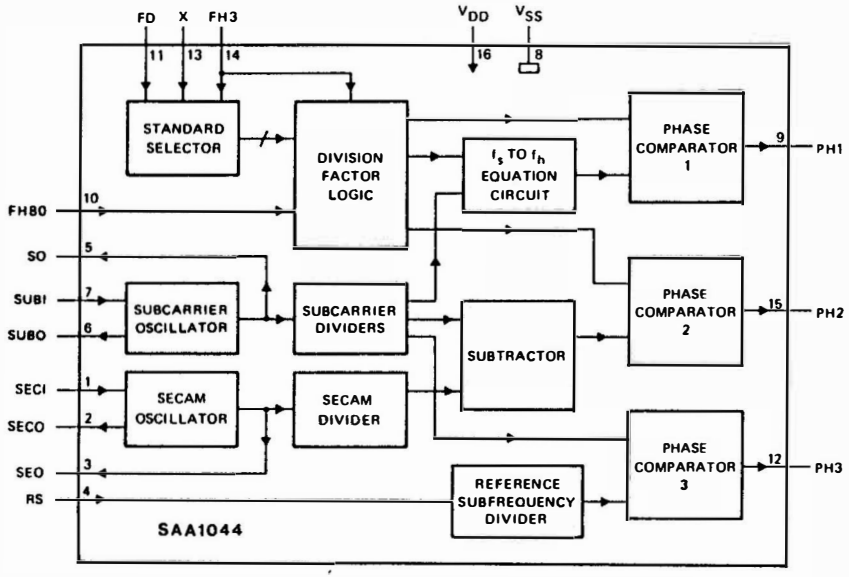

Fig. 1 Block diagram.

PACKAGE OUTLINE

16-lead DIL; plastic (SOT-38).

SAA1044

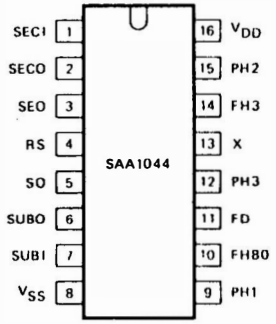

Fig. 2 Pinning diagram.

PINNING

1	SECI	SECAM oscillator input ($272f_H$)
2	SECO	SECAM oscillator output ($272f_H$)
3	SEO	inverted SECAM oscillator output
4	RS	reference subfrequency
5	SO	inverted subcarrier oscillator output
6	SUBO	subcarrier oscillator output
7	SUBI	subcarrier oscillator input
8	V_{SS}	negative supply voltage (ground)
9	PH1	phase comparator 1 output (FHB0/SUBI)
10	FHB0	1,25 MHz input (from SAA1043)
11	FD	standard programming input
12	PH3	phase comparator 3 output (RS/SUBI)
13	X	standard programming input
14	FH3	standard programming input (from SAA1043)
15	PH2	phase comparator 2 output (SECI/FH80)
16	V_{DD}	positive supply voltage

FUNCTIONAL DESCRIPTION

Programming of operating standard

The standard required for operation is programmed using the inputs FD, X and FH3 as shown in Table 1.

Table 1 Programming of operating standard

standard	FD	X	FH3	relationship of subcarrier frequency (f_S) to horizontal scan frequency (f_H)
PAL	0	1	400 Hz	$f_S = 283{,}7516 f_H$
SECAM	0	0	don't care	$f_S = 282 f_H$
PAL-N	1	1	400 Hz	$f_S = 229{,}2516 f_H$
PAL-M	1	0	1	$f_S = 227{,}25 f_H$
NTSC	1	0	0	$f_S = 227{,}5 f_H$

Positive logic: 1 = HIGH; 0 = LOW

Subcarrier/horizontal scan frequency relationship

The input FH80 from SAA1043 is the reference for horizontal scan frequency (f_H). This frequency is reduced by a factor determined by the selected operating standard to give a value of $8f_H$ (PAL, SECAM) or $10f_H$ (PAL-N, PAL-M, NTSC) to phase comparator 1. The subcarrier frequency (f_S) is manipulated to provide a comparable value at the second input to the phase comparator. When the frequencies of the two inputs to phase comparator 1 are equal, the relationship between f_H and f_S is as shown in Table 1.

Phase comparator 1 functions with an exclusive-OR phase detector circuit and provides an output which may be used to control a voltage-controlled oscillator (VCO) via a low-pass filter. The VCO reference can be the subcarrier or the horizontal scan frequency and the filter can be active or passive, depending on application.

A second subcarrier oscillator circuit is provided for SECAM operation. The operating frequency of this is centred on $272f_H$ to give, when $f_S = 282f_H$, comparable values of $5f_H$ at the two inputs to phase comparator 2. A second VCO loop can be used to control the SECAM oscillator frequency.

The high degrees of accuracy and stability required for GENLOCK applications are met by phase comparator 3. This compares the internal subcarrier and external reference frequencies. To adjust the phase over 2π, this comparator has a linear characteristic over 4π. The output signal PH3 has a period time of $f_S/4$ and a duty cycle of between 12,5% and 62,5% giving a sensitivity of 240 mV/rad. Errors due to temperature variation are minimized by symmetrical circuit and chip design.

RATINGS

Limiting values in accordance with the Absolute Maximum System (IEC 134)

Supply voltage range with respect to V_{SS}	V_{DD}		−0,5 to + 15	V
Input voltage range	V_I		−0,5 to (V_{DD} + 0,5)*	V
Input current	$\pm I_I$	max.	10	mA
Output voltage range	V_O		−0,5 to (V_{DD} + 0,5)*	V
Output current	$\pm I_O$	max.	10	mA
Power dissipation per output	P_O	max.	100	mW
Total power dissipation per package	P_{tot}	max.	200	mW
Operating ambient temperature range	T_{amb}		−25 to + 70	°C
Storage temperature range	T_{stg}		−55 to + 150	°C

HANDLING

Inputs and outputs are protected against electrostatic charge in normal handling. However, to be totally safe, it is desirable to take normal precautions appropriate to handling MOS devices (see 'Handling MOS Devices').

* V_{DD} + 0,5 V not to exceed 15 V.

COMPUTER INTERFACE FOR TUNING AND CONTROL (CITAC)

GENERAL DESCRIPTION

The SAB3036 provides closed-loop digital tuning of TV receivers, with or without a.f.c., as required. It also controls 4 general purpose I/O ports and 4 high-current outputs for tuner band selection.

The IC is used in conjunction with a microcomputer from the MAB8400 family and is controlled via a two-wire, bidirectional I²C bus.

Features

- Combined analogue and digital circuitry minimizes the number of additional interfacing components required
- Frequency measurement with resolution of 50 kHz
- Selectable prescaler divisor of 64 or 256
- 32 V tuning voltage amplifier
- 4 high-current outputs for direct band selection
- Four general purpose input/output (I/O) ports
- Tuning with control of speed and direction
- Tuning with or without a.f.c.
- Single-pin, 4 MHz on-chip oscillator
- I²C bus slave transceiver

QUICK REFERENCE DATA

Supply voltages			
(pin 5)	V_{P1}	typ.	12 V
(pin 14)	V_{P2}	typ.	13 V
(pin 9)	V_{P3}	typ.	32 V
Supply currents (no outputs loaded)			
(pin 5)	I_{P1}	typ.	23 mA
(pin 14)	I_{P2}	typ.	0,1 mA
(pin 9)	I_{P3}	typ.	0,6 mA
Total power dissipation	P_{tot}	typ.	300 mW
Operating ambient temperature range	T_{amb}	−20 to + 70	°C

PACKAGE OUTLINE

18-lead DIL; plastic (SOT-102HE).

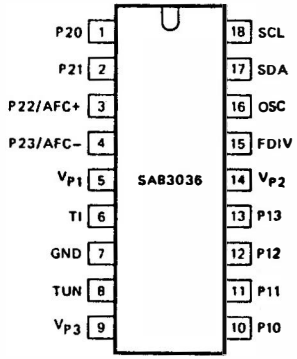

Fig. 2 Pinning diagram.

PINNING

1	P20	general purpose input/output ports
2	P21	
3	P22/AFC+	general purpose input/output ports and a.f.c. inputs
4	P23/AFC−	
5	V_{P1}	+ 12 V supply voltage
6	TI	tuning voltage amplifier inverting input
7	GND	ground
8	TUN	tuning voltage amplifier output
9	V_{P3}	+ 32 V supply for tuning voltage amplifier
10	P10	high-current band-selection output ports
11	P11	
12	P12	
13	P13	
14	V_{P2}	positive supply for high-current band-selection output circuits
15	FDIV	input from prescaler
16	OSC	crystal oscillator input
17	SDA	serial data line, I²C bus
18	SCL	serial clock line, I²C bus

Purchase of Philips I² C components conveys a licence under the Philips' I² C patent to use the components in the I² C system provided the system conforms to the I² C specifications defined by Philips.

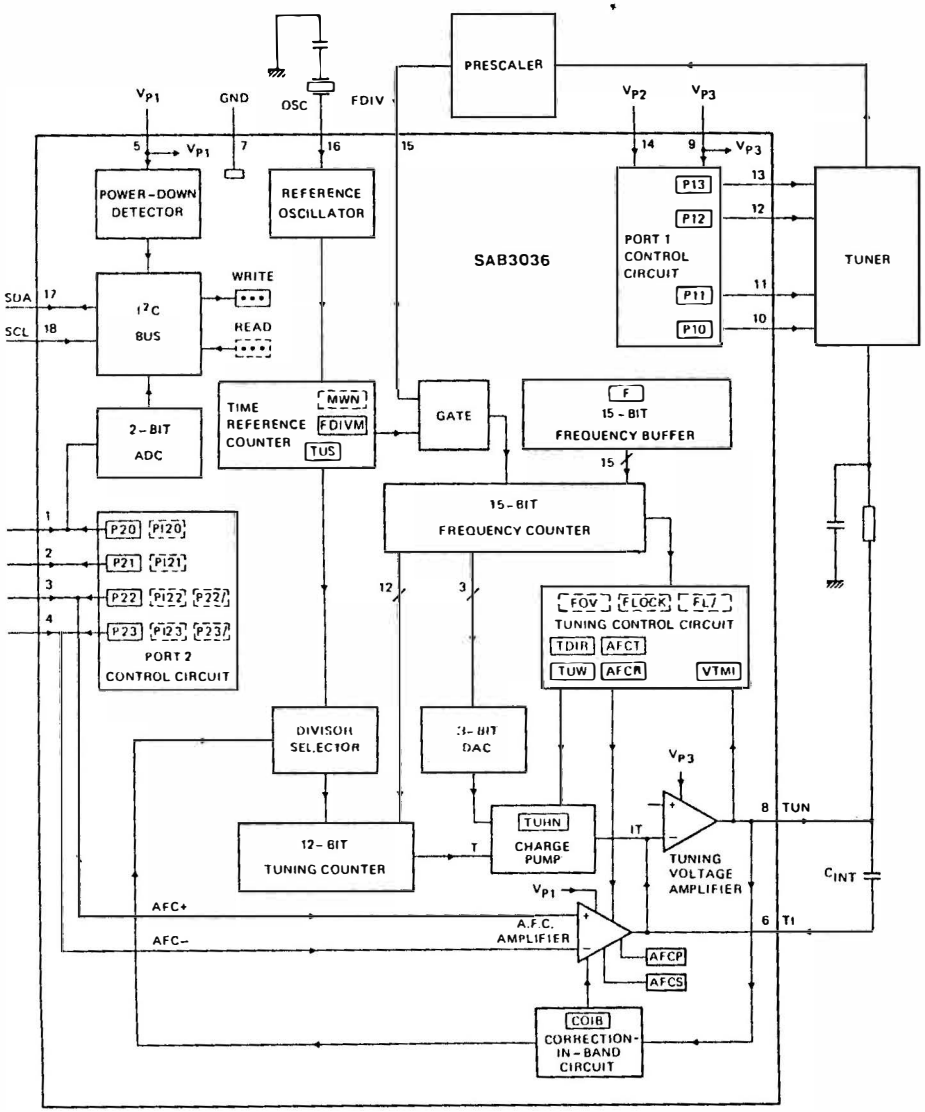

Fig. 1 Block diagram.

SAB3036

FUNCTIONAL DESCRIPTION

The SAB3036 is a monolithic computer interface which provides tuning and control functions and operates in conjunction with a microcomputer via an I^2C bus.

Tuning

This is performed using frequency-locked loop digital control. Data corresponding to the required tuner frequency is stored in a 15-bit frequency buffer. The actual tuner frequency, divided by a factor of 256 (or by 64) by a prescaler, is applied via a gate to a 15-bit frequency counter. This input (FDIV) is measured over a period controlled by a time reference counter and is compared with the contents of the frequency buffer. The result of the comparison is used to control the tuning voltage so that the tuner frequency equals the contents of the frequency buffer multiplied by 50 kHz within a programmable tuning window (TUW).

The system cycles over a period of 6,4 ms (or 2,56 ms), controlled by the time reference counter which is clocked by an on-chip 4 MHz reference oscillator. Regulation of the tuning voltage is performed by a charge pump frequency-locked loop system. The charge IT flowing into the tuning voltage amplifier is controlled by the tuning counter, 3-bit DAC and the charge pump circuit. The charge IT is linear with the frequency deviation Δf in steps of 50 kHz. For loop gain control, the relationship $\Delta IT/\Delta f$ is programmable. In the normal mode (when control bits TUHN0 and TUHN1 are both at logic 1, see OPERATION), the minimum charge IT at Δf = 50 kHz equals 250 μA μs (typical).

By programming the tuning sensitivity bits (TUS), the charge IT can be doubled up to 6 times. If correction-in-band (COIB) is programmed, the charge can be further doubled up to three times in relation to the tuning voltage level. From this, the maximum charge IT at $\Delta f \approx 50$ kHz equals $2^6 \times 2^3 \times 250\ \mu A\ \mu s$ (typical).

The maximum tuning current I is 875 μA (typical). In the tuning-hold (TUHN) mode (TUHN is active LOW), the tuning current I is reduced and as a consequence the charge into the tuning amplifier is also reduced.

An in-lock situation can be detected by reading FLOCK. When the tuner oscillator frequency is within the programmable tuning window (TUW), FLOCK is set to logic 1. If the frequency is also within the programmable a.f.c. hold range (AFCR), which always occurs if AFCR is wider than TUW, control bit AFCT can be set to logic 1. When set, digital tuning will be switched off, a.f.c. will be switched on and FLOCK will stay at logic 1 as long as the oscillator frequency is within AFCR. If the frequency of the tuning oscillator does not remain within AFCR, AFCT is cleared automatically and the system reverts to digital tuning. To be able to detect this situation, the occurrence of positive and negative transitions in the FLOCK signal can be read (FL/1N and FL/0N). AFCT can also be cleared by programming the AFCT bit to logic 0.

The a.f.c. has programmable polarity and transconductance; the latter can be doubled up to 3 times, depending on the tuning voltage level if correction-in-band is used.

The direction of tuning is programmable by using control bits TDIRD (tuning direction down) and TDIRU (tuning direction up). If a tuner enters a region in which oscillation stops, then, providing the prescaler remains stable, no FDIV signal is supplied to CITAC. In this situation the system will tune up, moving away from frequency lock-in. This situation is avoided by setting TDIRD which causes the system to tune down. In normal operation TDIRD must be cleared.

If a tuner stops oscillating and the prescaler becomes unstable by going into self-oscillation at a very high frequency, the system will react by tuning down, moving away from frequency lock-in. To overcome this, the system can be forced to tune up at the lowest sensitivity (TUS) value, by setting TDIRU.

Setting both TDIRD and TDIRU causes the digital tuning to be interrupted and a.f.c. to be switched on.

The minimum tuning voltage which can be generated during digital tuning is programmable by VTMI to prevent the tuner being driven into an unspecified low tuning voltage region.

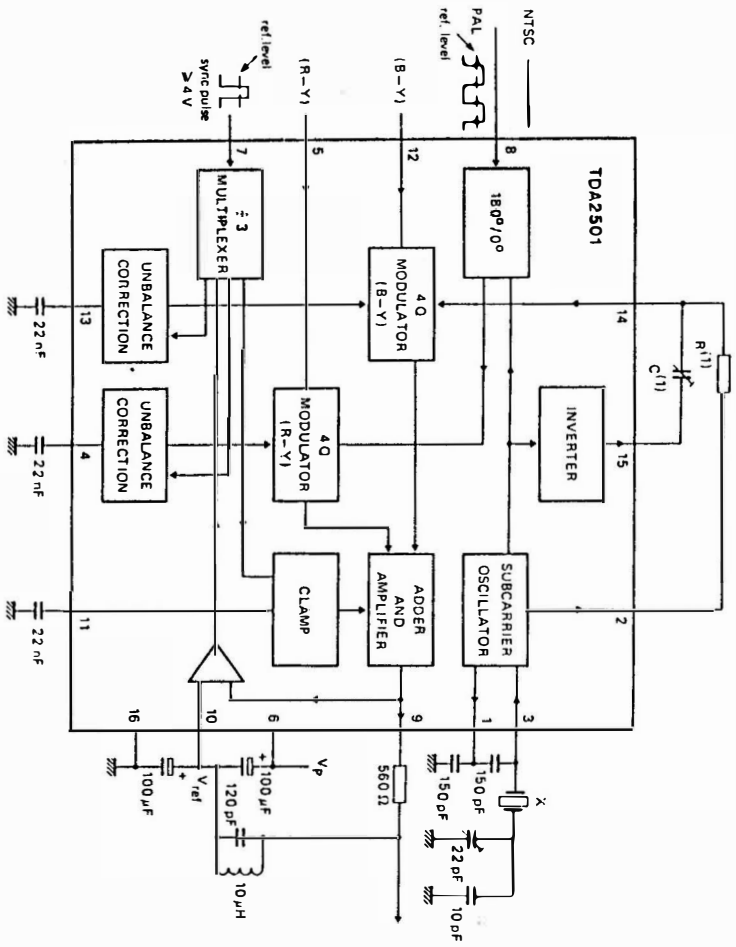

Fig. 1 Block diagram. Also test and application diagram.

(1) R = 0,885 (2 π fC); for PAL f = 4,433 619 MHz, R = 963 Ω and C = 33 pF.

PAL — NTSC ENCODER

The TDA2501 encodes two colour-difference signals R-Y and B-Y onto one subcarrier. Quadrature modulation allows the coding to be in accordance with either the PAL or NTSC system.

Functions:

- Generates two sinusoidal subcarriers with a relative phase of 90° (also accepts external subcarriers)
- Modulates the two subcarriers with the colour difference signals
- Inverts the output from one modulator on command of an external signal (as in case of PAL)
- Sums the output from the modulators to obtain a quadrature modulated output signal
- Clamps the output d.c. level to a reference voltage
- Divides the frequency of horizontal sync pulses by three so that the output level can be clamped and the balance of the two modulators sequentially controlled during the line-blanking minus burst-key period

QUICK REFERENCE DATA

Supply voltage (pin 6)	V_P	typ.	6 V
Supply current	I_P	typ.	40 mA
Output chrominance voltage (pin 9)	$V_{9(p-p)}$	max.	1,4 V
Storage temperature	T_{stg}	−65 to +150	°C
Operating ambient temperature	T_{amb}	−25 to +70	°C

PACKAGE OUTLINE

16-lead DIL; plastic with internal heat spreader (SOT-38WE-2).

16-LEAD DUAL IN-LINE; PLASTIC WITH INTERNAL HEAT SPREADER (SOT-38WE-2)

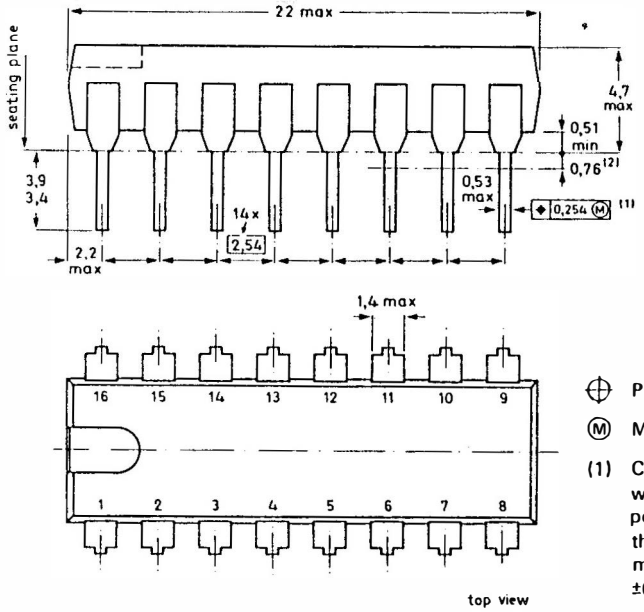

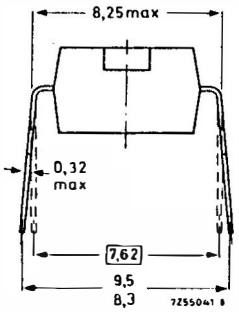

⊕ Positional accuracy.

Ⓜ Maximum Material Condition.

(1) Centre-lines of all leads are within ±0,127 mm of the nominal position shown; in the worst case, the spacing between any two leads may deviate from nominal by ±0,254 mm.

(2) Lead spacing tolerances apply from seating plane to the line indicated.

Dimensions in mm

SOLDERING

1. By hand

   Apply the soldering iron below the seating plane (or not more than 2 mm above it).
   If its temperature is below 300 °C it must not be in contact for more than 10 seconds; if between 300 °C and 400 °C, for not more than 5 seconds.

2. By dip or wave

   The maximum permissible temperature of the solder is 260 °C; this temperature must not be in contact with the joint for more than 5 seconds. The total contact time of successive solder waves must not exceed 5 seconds.
   The device may be mounted up to the seating plane, but the temperature of the plastic body must not exceed the specified storage maximum. If the printed-circuit board has been pre-heated, forced cooling may be necessary immediately after soldering to keep the temperature within the permissible limit.

DESCRIPTION

The colour difference signals B-Y and R-Y with a maximum amplitude of 1,4 volt are to be applied at pin 12 and pin 5. D.C.-coupling of the input signals is allowed if their d.c. levels are within specified limits from the d.c. level at pin 10 (V_{ref}). The following table shows these limits as a function of supply voltage. The table also shows the limits of the reference voltage range as a function of the supply voltage.

supply voltage V_{6-16} (V)	input d.c. (R-Y) (B-Y) min. (V)*	V_{5-16} V_{12-16} (V) max. (V)*	reference voltage V_{10-16} (V)		
			min	typ.	max.
5,5	2,4	3,3	2,3	3,0	3,5
6,0	$> V_{ref} - 1,4$ V	3,8	2,4	3,3	3,9
7,0	$> V_{ref} - 1,4$ V	4,8	2,6	4,0	4,7
8,0	$> V_{ref} - 1,4$ V	5,8	2,8	4,8	5,5
9,0	$> V_{ref} - 1,4$ V	6,8	3,0	5,5	6,3
10,0	$> V_{ref} - 1,4$ V	7,8	3,2	6,3	7,1

* Minimum 2,4 V.
** At $V_S - 2,2$ V.
* Minimum values at 0,2 V_S + 1,2 V.
Typical values without pull-up or pull-down resistor.
Maximum values at 0,8 $V_S - 0,9$ V.

The inputs (B-Y) and (R-Y) should be zero, independent of their (limited) d.c.-levels, during the line-blanking minus burst-key period (LB − BK). Clamping the output and correcting the out-of-balance of the modulators, is done by applying a HIGH level to pin 7 within the (LB − BK) period (e.g. line sync pulse).

Modulation at output:
V_8 = LOW; output = sc x (B-Y) + sc' x (R-Y)
V_8 = HIGH; output = sc x (B-Y) − sc' x (R-Y)
in which sc' = subcarrier
sc = 90° phase-shifted subcarrier to sc' (sc lags).

The bandpass filter at the output suppresses the d.c. components of the (R-Y) + (B-Y) signal. Luminance (Y) is not processed by this circuit.

Internal subcarrier

The internal subcarrier oscillator is crystal controlled. The oscillator generates a sinewave with low harmonic distortion and an amplitude of about 500 mV peak-to-peak. The amplitude can be changed if necessary with a current input at pin 1. The adjustment range is 0 to 800 mV, with a corresponding current range of +250 to −150 μA.

Phase shift

To obtain a 90° phase-shifted carrier, two low impedance subcarrier outputs are provided, pins 2 and 15, the last being the inverse of the first. Between pins 2 and 15 an external RC combination must be used to obtain the desired 90° shift. The capacitor value must be limited to 33 pF to minimize subcarrier distortion.

The resistor required between pins 2 and 14 is 0,885 (2π fC).

SECAM ENCODER

GENERAL DESCRIPTION

The TDA2506 converts colour-difference signals (D'_R and D'_B) into sequential, frequency modulated signals according to the SECAM system. The signals (D'_R) and (D'_B) are the colour difference signals before low-frequency pre-emphasis; $D'_R = -1{,}9\ (R-Y)$ and $D'_B = +1{,}5(B-Y)$. The circuit is intended for use in video cameras, games, recorders and players, PAL-SECAM transcoding circuits and SECAM test signal generators.

Synchronizing pulses required for operation of the TDA2506 may be obtained from a universal sync generator SAA1043 or other pulse generator. All pulses are to be active HIGH and are as follows:

Horizontal sync pulses to pin 11
Half-rate horizontal sync (H/2) pulses to pin 9
Vertical sync pulses to pin 12
Chrominance blanking pulses to pin 13 (may include colour-killer pulses)

Frequency modulation is performed in conjunction with modulator-controller TDA2507.

Features

- Chrominance processor
- Vertical identification signal generator
- Timing pulse output to TDA2507
- Sample and hold circuit for control signal from TDA2507
- No adjustments of external components required (except high-frequency pre-emphasis (bell filter) stage)

QUICK REFERENCE DATA

Supply voltage	V_{4-2}	typ.	5 V
Supply current	I_4	typ.	45 mA
Reference voltage	V_{7-2}, V_{22-24}	typ.	3,5 V
Operating ambient temperature range	T_{amb}	−25 to +70	°C
Storage temperature range	T_{stg}	−65 to +150	°C

PACKAGE OUTLINES

24-lead DIL; plastic (with internal heat spreader) (SOT-101B).

Switched-gain summing amplifier and limiter

Inputs into the summing amplifier are the sequential $D'_R{}^*$ and $D'_B{}^*$ signals, the vertical identification sawtooth waveform and reference d.c. levels. The gain of the amplifier is switched by the internally delayed H/2 waveform to give the correct input amplitudes for the FM modulator ($D'_R{}^*$ gain = 280/230 x $D'_B{}^*$ gain). An offset is also introduced between the black levels of the $D'_R{}^*$ and $D'_B{}^*$ signals which corresponds to the upper and lower thresholds of the limiter.

FM modulator and phase switch

The FM modulator provides accurate FM modulation which follows the amplitude envelopes of the sequential $D'_R{}^*$ and $D'_B{}^*$ waveforms. The centre frequencies of 4 406,250 kHz for the $D'_R{}^*$ signal and 4 250,000 kHz for the $D'_B{}^*$ signal are controlled by d.c. levels from the sample and hold circuit (which in turn are controlled by the TDA2507). The upper and lower frequency limits are 4 756,000 ± 35 kHz and 3 900,000 ± 35 kHz.

Reference d.c. levels are switched within the FM modulator to define the starting phase of the modulator output (pin 23) at the initiation of each horizontal and vertical scan. The starting phase sequence is as follows:

vertical scan (frame to frame) 0°, 180°, 0°, 180°, repeating;

horizontal scan (line to line) 0°, 0°, 180°, 0°, 0°, 180°, repeating.

Chrominance blanking stage

The frequency modulated colour difference signals are passed via high-frequency pre-emphasis and band-pass filters to the chrominance blanking input at pin 3. The d.c. level of this input should be equal to the reference voltage at pin 7. Blanking occurs during the chrominance blanking pulse. The stage gain is 1,75.

Vertical identification sawtooth generator

Vertical sync, horizontal sync and chrominance blanking pulses are used to determine vertical identification (see Fig. 4). The vertical identification sawtooth generator is driven in opposite directions for identification signals IdR and IdB; the capacitor for the generator is connected at pin 14. If no vertical identification is required, pin 14 should be connected to the FM reference voltage at pin 22.

Pulse shaper

This stage developes all pulses that are required within the TDA2506 and also the timing pulses required for the modulator controller TDA2507 (see Fig. 3). Internal H/2 pulses are generated by a flip-flop working from the horizontal sync input (pin 11), this makes the H/2 input at pin 9 necessary only if it is required to lock the modulator into a specific phase sequence. If the H/2 input is not required, pin 9 should be connected to ground. A pulse separator at the chrominance blanking/colour-killer input (pin 13) allows this input to be used for blanking the sequential $D'_R{}^*/D'_B{}^*$ signal.

Sample and hold circuit

This circuit provides reference voltages to the FM modulator which set the centre modulation frequencies for the sequential $D'_R{}^*$ and $D'_B{}^*$ signals. The reference voltage levels are supplied to pin 15 from the TDA2507 in a sequence that is time-related to $D'_R{}^*/D'_B{}^*$ switching. The levels are sampled and then held for $D'_R{}^*$ using capacitors at pins 16 and 17, and for $D'_B{}^*$ using capacitors at pins 19 and 20.

PHILIPS

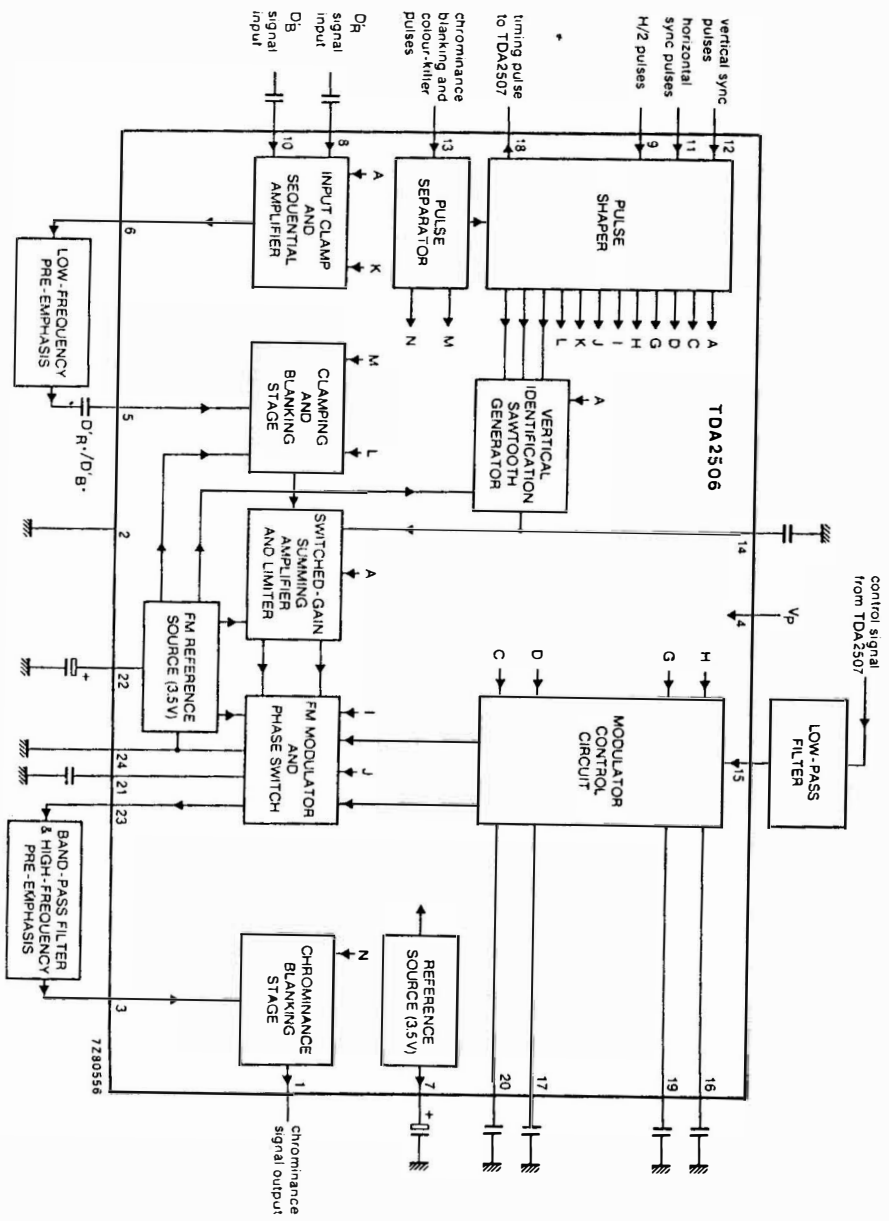

Fig. 1 Block diagram.

Pin functions

1. Chrominance signal output.
2. Ground.
3. Input to chrominance blanking stage from high-frequency pre-emphasis and band-pass filter.
4. Positive supply voltage.
5. Input to clamping and blanking stage from low-frequency pre-emphasis filter.
6. Output from sequential amplifier to low-frequency pre-emphasis filter.
7. Reference voltage output.
8. D'_R signal input.
9. H/2 pulse input (required only if specific phase sequencing is desired).
10. D'_B signal input.
11. Horizontal sync pulse input.
12. Vertical sync pulse input.
13. Chrominance blanking and colour-killer pulse input.
14. Capacitor for vertical identification sawtooth.
15. Control signal input from TDA2507 via low-pass filter.
16. 4 406,250 kHz frequency adjustment.
17. (R-Y) control.
18. Timing pulse output to TDA2507.
19. 4 250,000 kHz frequency adjustment.
20. (B-Y) control.
21. FM modulator tuning capacitor (fixed).
22. FM reference voltage output.
23. FM modulator output to high frequency pre-emphasis and band-pass filter.
24. Ground connection for FM modulator.

FUNCTIONAL DESCRIPTION

Input clamp and sequential amplifier

This circuit clamps the zero levels of the D'_R and D'_B input signals (pins 8 and 10) to the reference voltage from pin 7. The input signals are switched into the amplifier sequentially by an internally delayed H/2 waveform. The amplifier output at pin 6 is D'_R when the delayed H/2 waveform is HIGH and D'_B when it is LOW. The stage gain is 1,5.

Clamping and blanking stage

After external low-frequency pre-emphasis, the sequential $D'_R{}^*$ and $D'_B{}^*$ signals are returned to the IC at pin 5. The signal amplitude at pin 5 is typically 0,5 V (peak-to-peak value) for 75% colour bar (EBU). Black levels are clamped to the FM reference voltage (pin 22). Blanking takes place during the chrominance blanking pulse and, if required, during the video blanking and/or colour killing pulses.

FUNCTIONAL DESCRIPTION (continued)

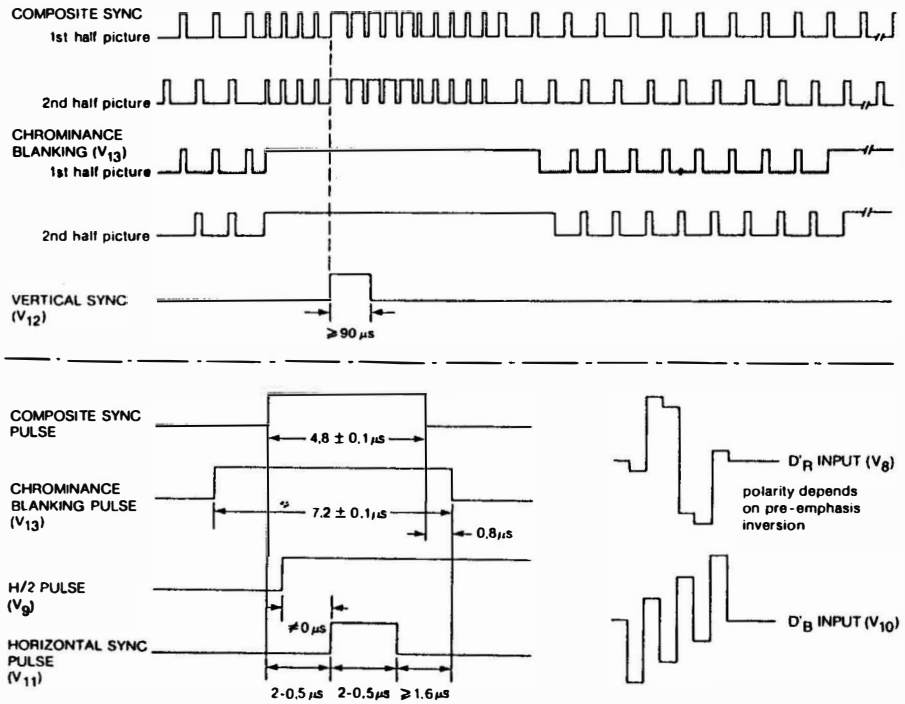

Fig. 2 Survey of input signals in relation to composite sync.

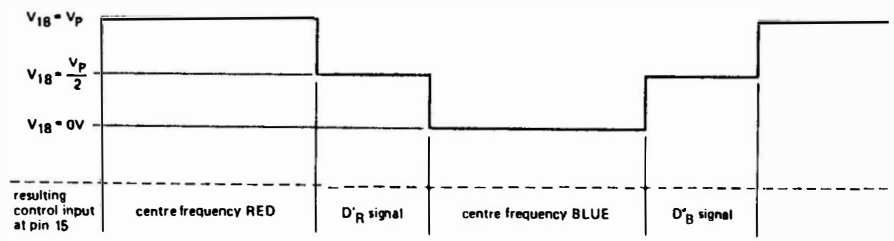

Fig. 3 Timing pulse output (pin 18) and resulting control input (pin 15).

FUNCTIONAL DESCRIPTION (continued)

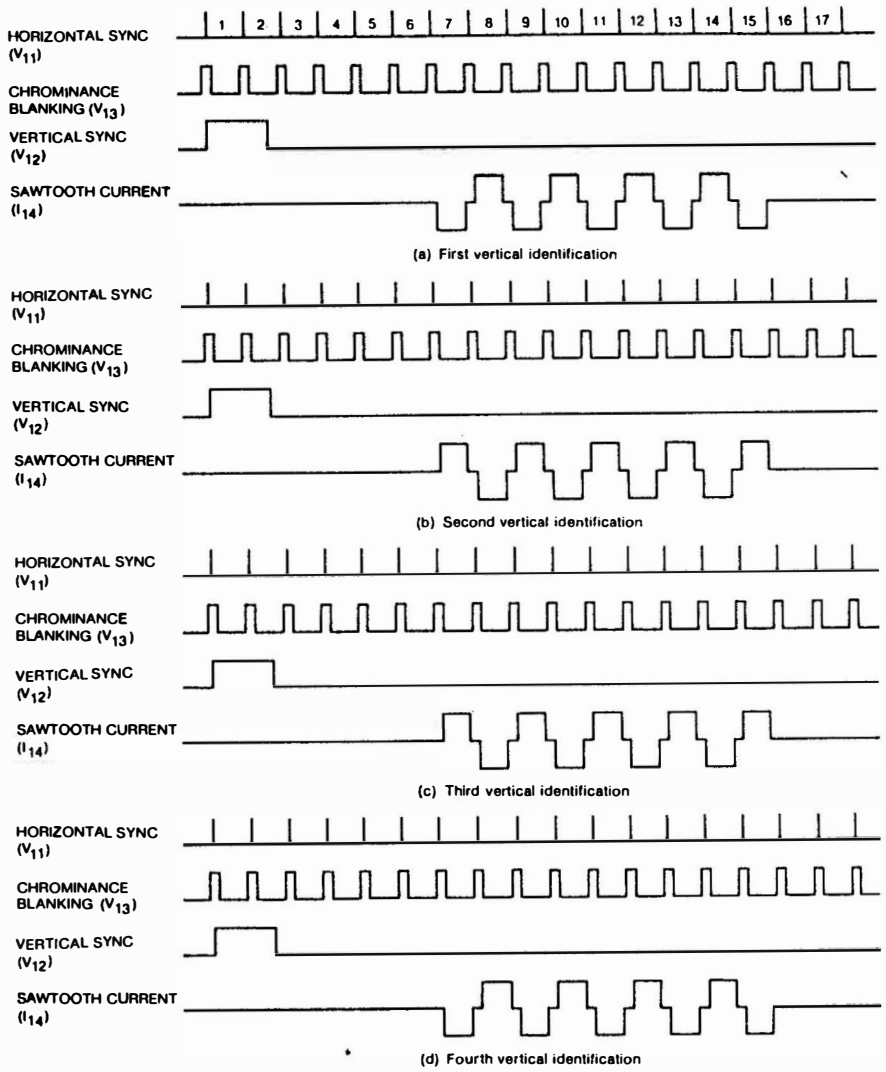

Fig. 4 Vertical identification generation.

FM MODULATOR CONTROLLER

GENERAL DESCRIPTION

The TDA2507 accepts FM signals that are sequentially modulated by two alternating subcarrier frequencies (SECAM signals) and provides sequential d.c. output levels to control the FM modulator.

The IC is intended for use with the SECAM encoder TDA2506 but can be adapted for other applications. Timing reference pulses from the modulator are required.

Two frequency reference phase-lock loops are contained within the IC; one for 4,406 25 MHz, and one for 4,250 MHz. Other frequencies can be accomplished by using external reference sources.

QUICK REFERENCE DATA

Supply voltage	$V_P = V_{3-6}$	typ.	5 V
Supply current at V_P = 5 V and with both PLL circuits functioning	I_3	typ.	40 mA
Reference voltage	V_{2-6}	typ.	3,5 V
Operating ambient temperature range	T_{amb}		−25 to +70 °C
Storage temperature range	T_{stg}		−65 to +150 °C

PACKAGE OUTLINES

16-lead DIL; plastic (with internal heat spreader) (SOT-38WE-9).

Pin functions

1. FM signal input (from TDA2506 pin 23).
2. Reference voltage output.
3. Positive supply voltage.
4. Horizontal sync output (f_H = 4 406,250/282 = 15,625 kHz).
5. Timing pulse input (from TDA2506 pin 18).
6. Ground.
7. Control signal output to TDA2506 via low-pass filter.
8. Input to synchronous demodulator from band-pass filter.
9. Output to band-pass filter.
10. Supply voltage for the divider stages and phase/frequency detectors of the two phase-lock loops.
11. Tuning capacitor for the 4,250 MHz reference oscillator.
12. Filter for the phase/frequency detector of the 4,250 MHz phase-lock loop.
13. Horizontal sync input (f_H).
14. Supply voltage for the two reference oscillators.
15. Tuning capacitor for the 4,406 25 MHz reference oscillator.
16. Filter for the phase/frequency detector of the 4,406 25 MHz phase-lock loop.

FUNCTIONAL DESCRIPTION

Phase-lock loops

The two phase-lock loops each comprise a voltage-controlled reference oscillator, two frequency divider stages and a phase/frequency detector circuit. The loops are closed by charge pumping the reference oscillators from the phase/frequency detector outputs. The centre frequencies of the loops are set by external capacitors at pin 15 (4,406 25 MHz) and pin 11 (4,250 MHz). The divider stages which follow the reference oscillators reduce the frequencies of both the loops to 15,625 kHz (f_H) at their respective inputs to the phase/frequency detectors. The reference signals to both phase/frequency detectors are obtained from the horizontal sync input at pin 13.

The divider and phase/frequency detector circuits can be switched off by connecting pin 10 to ground. This leaves only the VCO of each PLL in circuit and allows external signals to be injected at pins 15 and 11, or crystals to be used for tuning the oscillators.

The accuracy of crystal tuning using only one crystal can be obtained by connecting pins 10, 14 and 16 to the reference voltage at pin 2 and connecting a 4,406 25 MHz crystal to pin 15. The 4,250 MHz PLL will follow the crystal-derived f_H reference from pin 4 via pin 13 and its phase/frequency detector.

Multiplexer and pulse shaper

The multiplexer receives the 4,406 25 and 4,250 MHz reference frequencies from the two VCOs and the FM signals $D'_R{}^*$ and $D'_B{}^*$ from the TDA2506 modulator. The signals are gated one at a time to the multiplexer output in a sequence determined by the timing pulses from TDA2506. The levels of the timing pulses (pin 5) are used in the pulse shaper to generate enable pulses for the multiplexer (Fig. 2). The multiplexer output sequence is as follows:

4,406 25 MHz (2 lines); $D'_R{}^*$ FM signal (1 line); 4,250 MHz (2 lines); $D'_B{}^*$ FM signal (1 line); repeating. The selection of $D'_R{}^*$ or $D'_B{}^*$ FM signal is a feature of the timing of the input at pin 5.

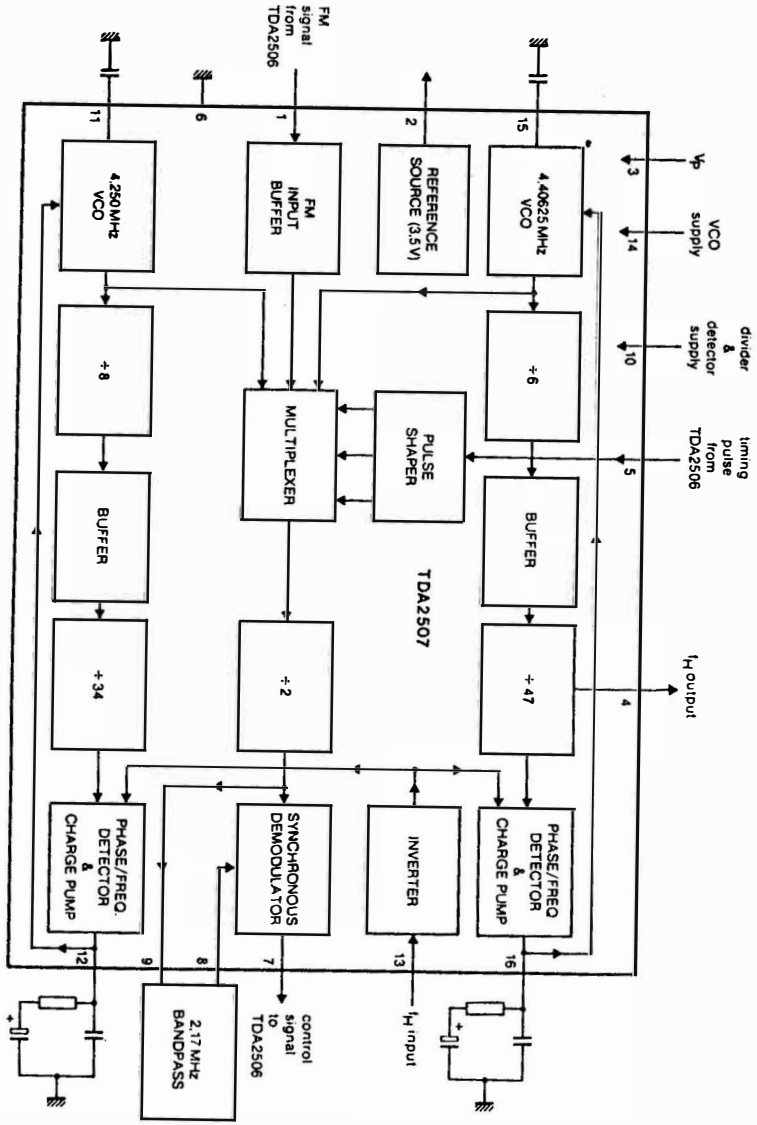

Fig. 1 Block diagram.

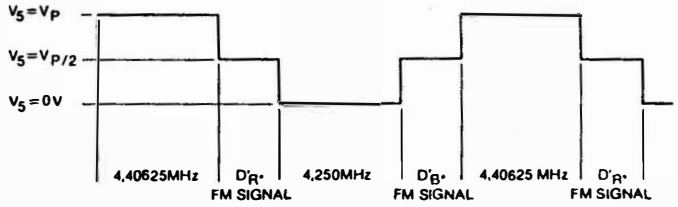

Fig. 2 Timing pulse waveform showing multiplexer output sequence.

Divide-by-two stage and synchronous demodulator

The divide-by-two stage halves the frequencies present in the multiplexer output and equalizes the amplitude and pulse shapes of the sequential signals.

Demodulation of the multiplexed signal is performed by filtering the signal via a 2,17 MHz band-pass filter (between pins 8 and 9) and using this filtered signal as a synchronous switch for the main signal. The d.c. level of the signal from pin 9 is referred externally to the reference voltage from pin 2. An external low-pass filter is required for the output signal from pin 7.

RATINGS

Limiting values in accordance with the Absolute Maximum Rating system IEC 134

Supply voltage	V_{3-6}	max.	13,2 V
Total power dissipation	P_{tot}	see Figs 3 and 4	
Operating ambient temperature range	T_{amb}	−25 to +70	°C
Storage temperature range	T_{stg}	−65 to +150	°C

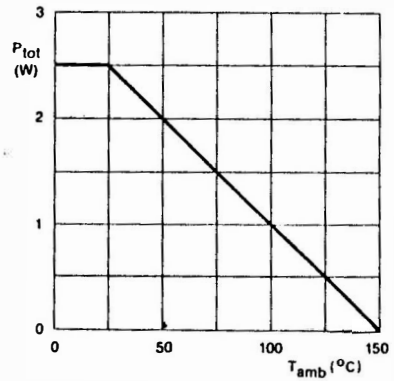

Fig. 3 Power derating curve for